Translation of the original operating manual

Manual for Installation, Operation and Maintenance

Markoprint X1JET HP/X1JET HP Premium

Part number of documentation: 72801031

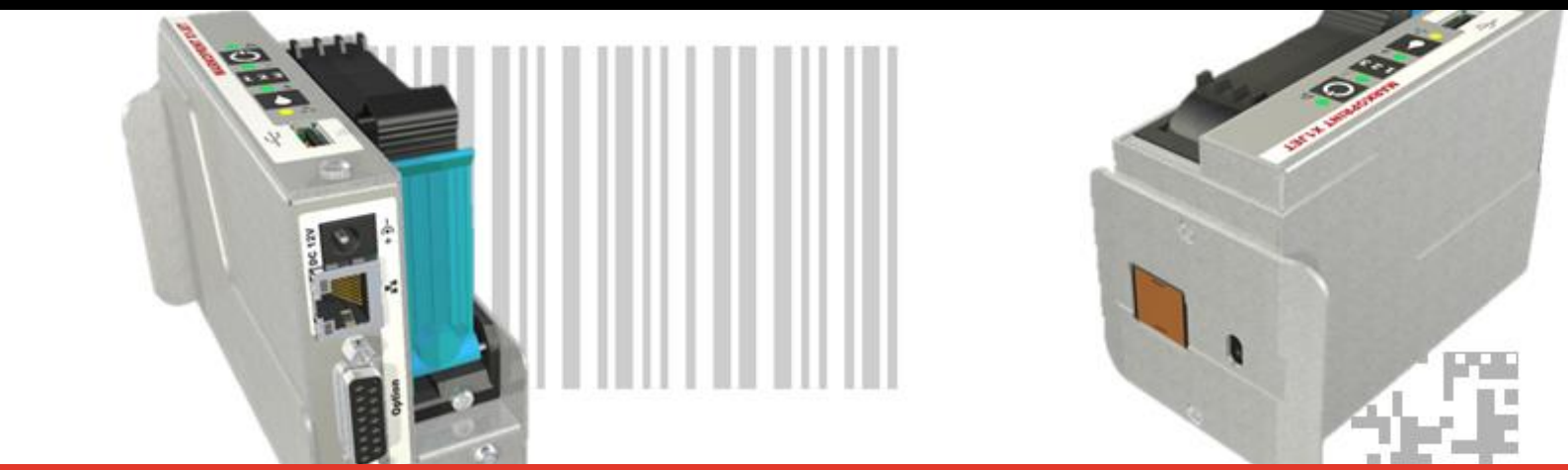

Copyright ©, Weber Marking Systems GmbH

Software Version 2.016

As at: May 06, 2015
Version 10

Weber Marking Systems GmbH
Maarweg 33
D-53619 Rheinbreitbach
E-Mail: info@webermarking.de
http://www.webermarking.de

72801031

Blank page

Contents

1. General Information

General Survey

Congratulations! You have purchased a high-quality print system. Our concern is to make sure that you profit from this system to your entire satisfaction over many years. In order to ensure this, we strongly recommend you to let our experienced specialists perform the installation.

Limitation of Liability

All pieces of information and notes of this manual have been arranged in consideration of applicable standards and regulations, state-of-the-art technology as well as our cognition and experiences over many years.
The manufacturer assumes no liability for damages caused by:

- Non-observance of this manual
- Non-observance of the intended use
- Use of unqualified personnel
- Manipulations at the system
- Technical changes
- Use of spare parts that are not approved by the manufacturer

The actual scope of delivery may differ from the explanations and illustrations provided herein in the case of special designs, additional order options or after recent technical changes.
The obligations of the supply contract the General Trading Conditions as well as the Terms of Delivery of the manufacturer and the valid legal regulations at the moment of conclusion of a contract generally apply.

Technical changes within the scope of improvement and development are subject to change without notice.

Warranty Clause

The warranty conditions are conform to the valid General Trading Conditions of the manufacturer at the moment of purchase.

Copyright Protection

This documentation or parts of this documentation may only be copied, photocopied, reproduced or translated into other languages for personal use. Without previous expressed written permission of **Weber Marking Systems GmbH** a reproduction for circulation to a third party is not permitted.

Purpose and Scope of this service manual

This manual enables safe and effective use of the Markoprint X1JET HP/ -Premium.
The Operating manual is a component of the device and must be stored close to the device to be accessible to the staff at all times. The staff must have read this manual thoroughly and understand the content before starting any work. Compliance with all safety notes and instructions given in this manual is a basic prerequisite to safe operation.
Furthermore, the local accident prevention regulations and general safety provisions for the area of application of the device are applicable.
Images in this manual serve to provide a basic understanding and may differ from the actual device version.

In addition to this manual, the instructions in the annexure on the components included are also applicable.

Hints for Use of this Manual

Please find in the following a detailed explanation of the notations and representations used in this manual.

Keys and buttons which you must push appear in squared brackets.

Example: Push [Enter] - button to save changes...

Procedures which should be followed in a specific order are listed in numbered paragraphs.

Step	Procedure
1	Disconnect power plug

Important messages are written in bold text and/or highlighted in grey.

This is an example for an important message!

Special notes:

⇨	… refers to a result, following an action by the operator.
→	… *refers to a chapter or document*.

Figures and drawings are numbered serially in the particular chapter. For example **„Fig. 2-1“** is the first figure in chapter 2.

Images in this manual serve to provide a basic understanding and may differ from the actual system version. Figures may be stated without protection device for clarification.

Explanation of Technical Terms

Technical Term	Explanation
CartClip	HP cartridge holder for storage of already opened cartridges to protect them against leaking or drying out of nozzle plate
Cartridge	See ink cartridge
Conveyor	The conveyor transports the products, which should be printed and pass them by the print head
DPI	**D**ots **P**er **I**nch 1 Inch = 25,4mm
Encoder	See shaft encoder
Flexbracket	Flexible mounting bracket of the control system
HP	Hewlett Packard – Manufacturer for ink cartridges
Ink cartridge	Original HP-cartridge TIJ 2.5 , model type 45
LED	Light emitting diode
Left hand	Installation of the system with cartridge holder on the left side (Modification to left-hand as described)
Nozzle plate	On the nozzle plate is the two-rowed arrangement of per 300 nozzles, which ejected the ink.
Print direction	Direction of movement of the product on the conveyor belt viewed from the control system in the print direction
Print intensity	Contrast of the print image. If necessary this parameter must be changed to optimize the print image. A higher intensity gives greater blackening and longer ink drying time
Print speed	Print speed = Speed of the conveyor. The speed of the conveyor must be keep constant
Print start delay	Offset print, i.e. by how much is printing delayed in millimeters after the product is detected by the light barrier.
Print width	The number of pixel can be increased or decreased using this parameter. The print image becomes narrower or wider.
Product sensor	A sensor for the detection of the product. Mostly used are optical sensors (photo sensor, light barrier, reflex sensor)
Right hand	Installation of the system with cartridge holder on the right side (standard configuration)
Sensor	See Product-sensor
Shaft encoder	A shaft encoder is used for the automatic detection of the conveyor speed and defines the print speed
TIJ	Thermal Ink Jet - print function of the HP cartridges
ZTV	Bulk Ink Supply System

Customer Service

Please contact your local distributor for technical information.

If failures at the print system occur, you should be prepared with the following information:

- Detailed error description.
- All information on the name plate of the print system.
- Version number of the system software and of the iDesign Software
- Configuration (Print, Basic, Advanced, Pro)
- Special functions of the software or hardware
- When did the error occur for the first time?

Prior to call our hotline service, please have a look at the manual (→ ***Chapter*** Faults***, Page*** 75) for potential references to eliminate the error.

Furthermore, our staffs are always interested in new information and experiences with the use of the product and which may be valuable for improvements to our products.

2. Safety Regulations

Behavior in Case of an Emergency

The operating personnel have to be familiar with the operation and the location of safety, accident notification-, first aid- and rescue devices.

What to do in Case of an Emergency?

- Initiate immediately all required emergency measures for injured persons. Observe valid safety regulations in any case in order to avoid further damages to persons.
- Call medical attendance for injured persons.
- Eliminate all accident causes.

General Safety Regulations

Safety regulations provide information in written and symbol form in order to warn you against dangers and to instruct you to avoid any damage to persons or to properties.
Safety regulations are started by signal words indicating the level of danger.
Safety regulations may be placed directly at the print system or in documents about this print system.

Explanation of Danger Degrees

⚠ DANGER	This symbol indicates a hazardous situation which, if not avoided, will result in death or serious injury. All safety regulations have to be observed to avoid any damage to persons.
⚠ WARNING	This symbol indicates a hazardous situation which, if not avoided, could result in death or serious injury. All safety regulations have to be observed to avoid any damage to persons.
⚠ CAUTION	This symbol indicates a hazardous situation which, if not avoided, may result in minor or moderate injury. All safety regulations have to be observed to avoid any damage to persons.
NOTICE	This symbol indicates a hazardous situation which, if not avoided, may result in damage to properties. All safety regulations have to be observed to avoid any damage to properties.

Intended Use

The working reliability of the print system is ensured only with intended use.
The Markoprint X1JET HP/ -Premium has been designed, built and must be used exclusively for the intended purpose described.
The Markoprint X1JET HP/ -Premium serves to create print images and to print these from the top or side onto smooth and absorbent product surfaces. The product must pass the Markoprint X1JET HP/ -Premium, i.e. positioned on a conveyor belt.

All working conditions and instructions, prescribed in this manual, will be observed.
Any use beyond the intended use or any alternative use of the equipment is regarded as misuse and may lead to hazardous situations.

Misuse of the device may lead to hazardous situations. Refrain, in particular, from subjecting the apparatus to the following:
Modification, retrofitting or alteration of the apparatus or individual sub-assemblies.

Any claims arising from damages due to undesignated use are rejected.

Reasonably Foreseeable Misuse

Another use as fixed in the „Intended Use“ or even more applies as not intended!

For damages caused by not intended use

- the operator bears the complete responsibility,
- the manufacturer assumes no liability.

If you do not use the system according to the regulations, risks may occur!

Not intended uses are e.g.:

- operation in explosive atmosphere
- the print system comes in contact with food …

Retrofitting and Changes at the Print System

Unauthorized retrofitting and changes at the system lead to an immediate expiration of liability and warranty covered so far by the manufacturer! This is also valid for interventions and program changes at programmable control systems as well as program changes at control units as far as they are not described in this Manual.
The electromagnetic performance of the system can be affected by amendments or changes of any kind.
Do not arrange any changes or amendments at the systems without consultation and written approval of the manufacturer.

Warning Notices at Print System

Particular sources of danger at the print system are marked by yellow labels. The used pictograms point out to following dangers:

Danger to Life

Special hazards

The following section identifies the remaining risks, determined following a risk analysis.

Observe the safety notes listed here and the warnings in other chapters of the manual to minimize health hazards and avert hazardous situations.

WARNING **Danger to life through electric shock!**

DANGER TO LIFE!

Contact with live parts poses imminent danger to life. Damaged insulation or individual components can be lethal.

Therefore:

- Immediately switch off the power supply and initiate repairs if the insulation is damaged.
- Work on the electrical system may only be performed by electricians.
- Before working on the electrical system, disconnect from the mains (remove mains plug) and check that power is off.
- Always disconnect mains before performing cleaning and repair tasks.
- Keep moisture from live parts. Moisture may cause a short-circuit.

CAUTION **Risk of injury through incorrect handling of batteries!**

RISK OF INJURY!

Rechargeable and primary batteries contain toxic heavy metals. They must be treated as special refuse and deposited at municipal collection points or be disposed of by a specialized company. Batteries must be handled with particular care.

Therefore:

- Never throw batteries into a fire or subject batteries to high temperatures. Explosion hazard.
- Do not charge batteries. Explosion hazard.
- Fluid escaping through incorrect use may cause skin irritations. Avoid contact with the fluid. In case of contact with the fluid, rinse with ample water. If the fluid comes into contact with the eyes, rinse immediately with water for 10 minutes and consult a doctor without delay.

CAUTION

Edges and corners pose risk of injury!

RISK OF INJURY!

Sharp edges and pointed corners may cause abrasions and cuts to the skin.

Therefore:

– Be cautious when working near sharp edges and pointed corners.
– If in doubt, wear protective gloves.

CAUTION

Risk of stumbling posed by dirt, objects lying about and connecting lines!

RISK OF INJURY!

Dirt, objects lying about and connecting lines for power, data- and signal lines may cause slipping and stumbling resulting in severe injuries.

Therefore:

– Always keep working area clean.
– Remove objects no longer required.
– Mark stumbling areas with yellow-black marking tape.
– Non tension connecting lines to system and pass it that no places of danger do arise

Remaining Risks

The print system is constructed for a safe operation. Hazards that are not preventable due to construction purposes are limited as far as possible by protection devices. A certain amount of risk is always existent! The knowledge about the remaining risks assists you to arrange your work safer and to avoid incidents. In order to avoid the dangers, please observe additionally the particular security advice in the single chapters.

Disposal

This print system complies with the RoHS EU-Regulation 2002/95/EG with observance of the fixed using prohibitions and avoiding pollutants.

Unauthorized persons

Work at the print system should only be performed by reliable personnel. Please comply with the legal age!

Only trained personnel are allowed to operate the print system. Trainees, apprentices etc. must be supervised by an experienced person while working at the print system.

Prior to start running the labeler the operator has to ensure that the manual of the labeler is available to all users of the machine and that the users have read and understood the manual. Only then the system may be put in operation.

The responsibility for the different tasks at the print system must be clearly specified and kept. There must be no ambiguous authorities for this may put the safety of the users at risk. Arrange a detailed work schedule if several persons work on the machine.

All work on the electrical equipment must be carried out by skilled electricians only.
Failures may be eliminated by authorized personnel only.
All work associated with the assembly, adjustment and maintenance at the machine may be carried out only by trained or instructed personnel.
The operator of the machine must ensure that the personnel are trained in dealing with the integrated control system prior to fix machine errors or maintain the system.

Personal Protective Equipment

Wear following protective equipment when performing work at the system:

SAFETY SHOES

Wear for protection against falling off parts and slipping.

PROTECTIVE CLOTHING

Are tight-fitting clothes with low tensile strength, with tight sleeve and without distant parts
Wear a hairnet if applicable
Do not wear jewelry or wrist watches

PROTECTIVE GOGGLES

For protection against splashes of detergents and flying parts

SAFETY GLOVES

For protection against sharp-edged items

Personal Protective Equipment for the following tasks	Protective Clothing	Safety Shoes	Safety Gloves	Protective Goggles
				
Transport	x	x	x	
Setting up and connecting of the system	x	x	x	x
Maintenance Work	x		x	x
	The documentation of the manufacturer of the single system components has to be observed!			

Working Places Operator Personnel

The print system is an automatic working system and does not require any operation for the printing procedure.

3. Technical Specifications

General

Dimensions (H x W x D in mm)	91 x 75 x 122 (excl. bracket, ink cartridge and connections)
Weight	570 g
Environmental Temperature:	5 - 40 ° C
Environmental Conditions:	10-90 % relative humidity (non-condensing)
Protection Rating	IP 40
Maximum operating time	The system is designed for continuous operating

Electrical

Voltage Power Supply: Four country-specific power plugs	100 - 240 VAC / 50-60Hz (1~)
Voltage System:	12 V DC
Current consumption:	max. 1,25 A
Power consumption:	max. 15 W
Power consumption Standby:	1,6 W

Data interfaces

EIA 232	Sub-D 15 Pol
Ethernet	RJ45
USB	USB-A socket for stick

Connections

Input voltage	phone jack 2,1 / 5,5mm
Sensor	Sub-D 15 Pol
Encoder	Sub-D 15 Pol
In-/Outputs	Sub-D 15 Pol
Traffic light	Sub-D 15 Pol

Performance data

Cable length System unit / Power supply in m	1,8
Text layout	Software iDesign
Parameter input	Software iDesign
Fonts **(optional)**	all available Windows fonts customer-specific fonts
Print height in mm	1 to 12,7
Max. print resolution[1)] in dpi	300/600
User language Software:	German, English, French, Spanish, Japanese
Barcodes[1)]	EAN 8, EAN 13, EAN 128, Code 2/5, Code 2/5 check, Code 39, Code 39 check, Code 128, DUN14, GS1 Databar
2D-Codes[1)]	Datamatrix, GS1 Datamatrix, OR-Code, PPN-Code
Automatic functions[1)]	Date, Time, Counter, customer-specific links
Graphic	**Monochrome** bitmap-graphics can be created i.e. with Paint or other software.
Print image storage	9 print images
Print image length	23.600 Pixel = 1m at 300dpi
Storage; optional expandable in GB	1
Storage in MB	32
Max. print speed in m/min at 300dpi, depending on resolution) **Markoprint X1JET HP/ -Premium *Print*** **Markoprint X1JET HP/ -Premium *Basic*** **Markoprint X1JET HP/ -Premium *Advanced*** **Markoprint X1JET HP/ -Premium *Pro***	 30 30 60 90

Print direction	L/R or R/L, from top or side. Print from bottom is **not** possible.

[1)] Not available in all Markoprint X1JET HP/ -Premium versions

The preferred print direction is from left to right. When printing from right to left, the minimum print start is 25 mm to the box front edge. If a lower distance is desired, an external photo sensor must be installed or the system can be modified to left-hand.

Inks

Specification	Type
Black	HP-Set 4 STABL HP-Set 14 MIBL 2 Cartridge HP Ultra Black Cartridge HP 2580 Cartridge HP SDBLK3 Cartridge HP WDBLK1 Cartridge HP WDBLK2
Color	HP-Set 26 RCBLU HP-Set 27 RCRD Cartridge HP WDGN1
Optional	Special inks HP-Set 12 UVINV
Other	On request

4. Transport, Packaging and Storage

Transport

Check the delivery for completeness and transport damages immediately upon receipt. Proceed as follows in case of externally visible transport damage:

- Decline delivery or accept with reservation only.
- Record extent of damage in the transport documentation or on the delivery note of the carrier.
- Initiate complaint.

Scope of Delivery

The scope of delivery of the Markoprint X1JET HP/ -Premium depends on the ordered options and the customer's application. Please control the scope of delivery when receiving the systems on the basis of the delivery note.

Scope of Delivery - Basic:

1 x System unit Markoprint X1JET HP/ -Premium

Optional:

- 72901202 - Power supply 12V / 15W
- 72900535 - USB-Stick, Content: → ***Chapter*** USB-Stick files***, page*** 92
- 72801031 - Operating Manual on the USB-Stick
- 71700015 - iDesign-Software on the USB-Stick
- 72801043 - Mounting bracket
- 33004927 - Ethernet cable 3m
- 72800002 - External light barrier
- 72801042 - Shaft encoder

Symbols on Packaging

As part of the installation and further use it may happen that the operator put user or maintenance personnel in charge of handling of packages. Therefore note the following important notes:

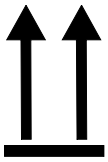

This way up

The arrowheads indicate the top of the package. They must always face upward to avoid damage to the content.

Fragile

Identifies packages with fragile or sensitive contents.
Handle the package with care, do not drop or subject to impacts.

Keep dry

Keep packages away from moisture and keep dry.

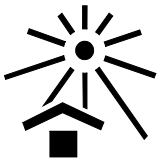

Protect from heat

Protect packages from heat and direct sunlight.

Transport and Unpacking

Safety Instructions

NOTICE

Material damage due to incorrect transport!

Remove the packaging material and the transportation safety devices on installation site and transport the print system in its original packaging to the place of installation.

CAUTION

Danger due falling parts!

– Wear safety shoes!

Packaging

On Packaging

The individual packages are packed in accordance with the expected transport conditions. Only environmentally-friendly materials were used for packaging.
Packaging serves to protect the individual components against transport damage, corrosion and other damage, up to the assembly stage. Do not, therefore, damage the packaging - remove shortly before assembly only.

Original packaging is available from the manufacturer to ensure optimal dispatch of the system.
Please contact your local distributor.

Handling of packaging materials

Dispose of packaging material in accordance with the applicable statutory provisions and local regulations.

NOTICE

Environmental damage!

Packaging materials are valuable raw materials and can, in many cases, be re-used or profitably recycled and re-used.

Therefore:

– Dispose of packaging materials in an environmentally-responsible manner.
– Observe the locally applicable disposal regulations. If necessary, commission a specialized company for disposal.

Storage

Controller

Store the controller under the following conditions:

- Do not store outdoors.
- Keep dry and free of dust.
- Do not expose to aggressive media.
- Keep away from direct sunlight.
- Avoid mechanical shock.
- Storage temperature: 5°C to 45°C.
- Relative humidity: maximum 60%.

Ink cartridge

New original sealed ink cartridges have a shelf life of up to 1 year. Observe the printed expiry date! The shelf life of different cartridge types differs.

Storage under 2 days:
Leave the ink cartridges in the print head holder and wipe off or rinse, if necessary, before restart.
→ ***Chapter*** To rinse the nozzles manually***, page*** 64

Storage over 3 days:
Insert the ink cartridge in a cartridge clip (CartClip).
→ ***Chapter*** Store Ink cartridge***, page*** 26

Store Ink cartridge

If ink cartridges are not used for an extended period of time, they must be stored in a cartridge clip (CartClip) to prevent the ink in the nozzles from drying out.
To do this, the ink cartridges must be removed from the controller.
→ ***Chapter*** Removing Ink Cartridge***, page*** 52

Instruction
To insert the ink cartridge in the CartClip:

Step	Procedure
1	Close the CartClip over the ink cartridge and press until the top flap of the CartClip snaps into the holder. (see Fig. 4-1)

Fig. 4-1: Inserting the HP ink cartridge in the CartClip

Instruction
To remove the ink cartridge from the CartClip:

Step	Procedure
1	Lift the top flap of the CartClip until the ink cartridge is released.
2	Pull the ink cartridge upward out of the CartClip. (see Fig. 4-2)

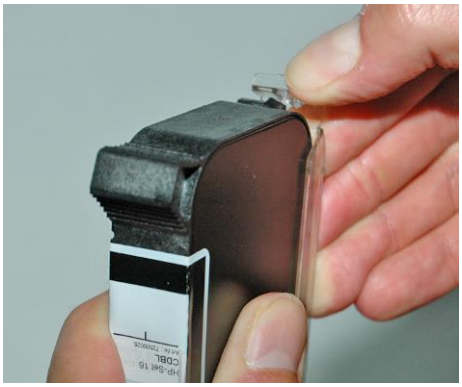

Fig. 4-2: Removing the HP ink cartridge in the CartClip

5. Construction and function

Brief description

The Markoprint X1JET HP/ -Premium is a thermal Inkjet Coder of Weber Marking Systems GmbH, for printing images quickly and cleanly onto smooth and absorbent product surfaces.
A print image, for instance, contains product descriptions, graphics, quantities, shelf life data, barcodes and product serial numbers.
The print images can be created directly with PC installed iDesign software and can be loaded in/or sent to the Markoprint X1JET HP/ -Premium by means of a USB stick or a network.
Up to 9 print images can call up for printing via keyboard.

The Markoprint X1JET HP/ -Premium comprises the controller and an external 12V power supply

Controller

The Markoprint X1JET HP/ -Premium comprises essentially a controller with integrated control electronics, cartridge bay with clamp and the connections for the power supply, shaft encoder, external photo sensor, in-/outputs at the back side of the system. At the top are a keypad with 4 control LEDs and a USB-A socket for a data transfer via USB-Stick.
The system unit is directly installed with a optional mounting bracket on the production line. The coder consists of a system unit and a ink cartridge from Hewlett Packard.
Standard the HP cartridge holder is mounted on the right side, also referred to as right-hand.
The preferred print direction is from left to right. When printing from right to left, the minimum print start is 25 mm to the box front edge. If a lower distance is desired, an external photo sensor must be installed. Or the system can be modified to left-hand.
The preferred print direction is than from right to left. When printing from right to left, the minimum print start is 25 mm to the box front edge.

Ink cartridge

The ink is contained in the cartridge ink ducts and the viscosity and surface tension of the ink prevents it from running out.
A heating element, which generates a steam bubble when current is briefly applied (1.9 µs), is fitted behind each jet opening.
This steam bubble gives the ink between the heating element and the jet opening an impulse and therefore “shoots” a defined quantity of ink out of the opening.
When the steam bubble reforms, a corresponding quantity is drawn from the storage container and the process can begin again. This process of ejecting an ink drop can be repeated 18,000 times a second.
Print images 1 mm to 12.7 mm high can be produced with a wide variety of fonts.
Various special inks are available for coding on many different surfaces.

SmartCard Functionality

The Markoprint X1JET HP print system is equipped in the MK2 version with SmartCard identification of the cartrigdes.

The X1JET HP MK2 has an additional contact block which connects the SmartCard chip with the analysis electronics by insertion of the SmartCard cartridge.

View of the SmartCard contacting cartridge

View of the SmartCard

The chip is detected by inserting the cartridge. The LEDs show this:

The Status-LED blinks green for 3 seconds if the SmartCard is detected.

The LED blinks green/red if a cartridge without SmartCard is inserted. The system works without the advantages of the SmartCard data.

If the print system isn’t activating for the use of cartridges without SmartCard, the LED will be blink red and the print system doesn’t print.

The LED blinks yellow/red if there is a read error on the SmartCard chip and the cartridge prints without consideration of the SmartCard data.

SmartCard Functions

The SmartCard functions are supported by software version 2.016 and higher.

Automatic storage of the ink filling level in 1% steps. The correct ink level of a cartridge is always detected, even by changing the cartridges. No more missing prints by interchanged cartridges.

Automatic detection of the ink type and automatic setting of the optimal ink paramaters. Ink volume, drop size, nozzle voltage and firing time are stored on the SmartCard chip.

The current ink type is displayed for control and prevention of wrong cartridges.

Exact ink consumption calculation. The usable number of drops is calculated by the ink weight (g), specific weight (g/ml) and drop size (in pl). The values are read out of the chip, depending on the ink type.

Warning message with expired shelf life - date of filling and shelf life are stored on the SmartCard chip

Warning message if cartridge is open for too long (installed life) - date of first insertion and maximum operating time are stored on the SmartCard chip.

iDesign displays the ink part number for easy reordering.

Following data are stored on the SmartCard chip for checking claims:

Date of the first cartrigde insertion, serial number of the controller, firmware version of the controller

Date of the last cartridge insertion, serial number of the controller, firmware version of the controller

Number how many times the cartridge was used.

The ink type can not set manually by using SmartCard cartridges.

The ink level is set automatically and can not be reset.

System versions

The Markoprint X1JET HP/ -Premium print system is in three different versions available: Markoprint X1JET HP/ -Premium *Print, / Basic, / Advanced* and *Pro.*

The Markoprint X1JET HP/ -Premium will be delivered as Print version standard. If the requirements exceed the scope of services of the Print version, an upgrade with costs to one of the other versions is available. See also → ***Chapter*** Software-Upgrade***, page*** 91.

The specifications of the separate versions can be found in the following table.

FUNCTION	SYSTEM VERSION

	Print	***Basic***	***Advanced***	***Pro***
max. Speed at 300 dpi	30	30	60	90
Layout length	1m	1m	1m	2m
DPI horizontal	50 - 900	50 - 900	50 - 900	50 - 900
DPI vertical	300	300	300 / 600	300 / 600
Fonts	Printer + TTF	Printer + TTF	Printer + TTF	Printer + TTF
Number of layouts	9	9	9	9
Text fields	Yes	Yes	Yes	Yes
Counter fields	No	No	Yes	Yes
Date fields	No	Yes	Yes	Yes
Date offset	No	No	Yes	Yes
Variables	No	No	No	No
Logos	Yes	Yes	Yes	Yes
Barcodes	No	No	Yes	Yes
2-D Codes	No	No	No	Yes
Action fields	No	No	Yes	Yes
USB-Stick Data transfer	Yes	Yes	Yes	Yes
Ethernet interface	Yes	Yes	Yes	Yes
Password	No	No	No	No
Spitting	Yes	Yes	Yes	Yes
Warming	Yes	Yes	Yes	Yes
RS232	Yes	Yes	Yes	Yes
Internal sensor	Yes	Yes	Yes	Yes
External sensor	Yes	Yes	Yes	Yes
Encoder	Yes	Yes	Yes	Yes
In-/ Outputs	2I / 4O	2I / 4O	2I / 4O	2I / 4O
Ink level display	LED	LED	LED	LED

Complete overview X1JET HP

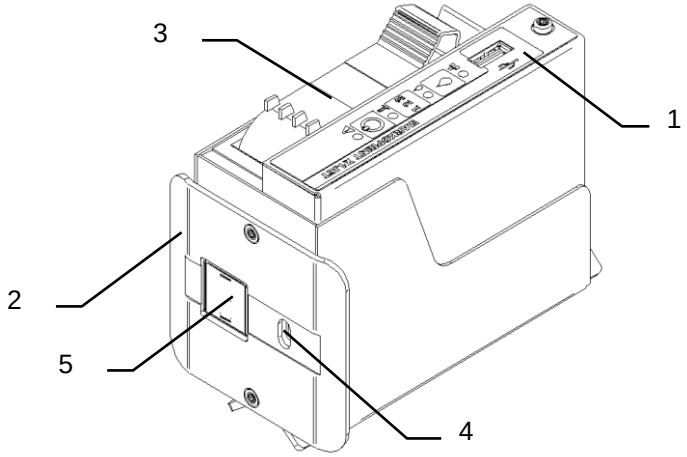

Fig. 5-1: X1JET HP Righthand-model

No.	Description
1	CONTROL PANEL WITH ENTRY KEYS AND LED-STATUS LIGHTS
2	FRONT PANEL
3	INK CARTRIDGE
4	OPENING FOR INTERNAL LIGHT BARRIER
5	CARTRIDGE NOZZLE PLATE

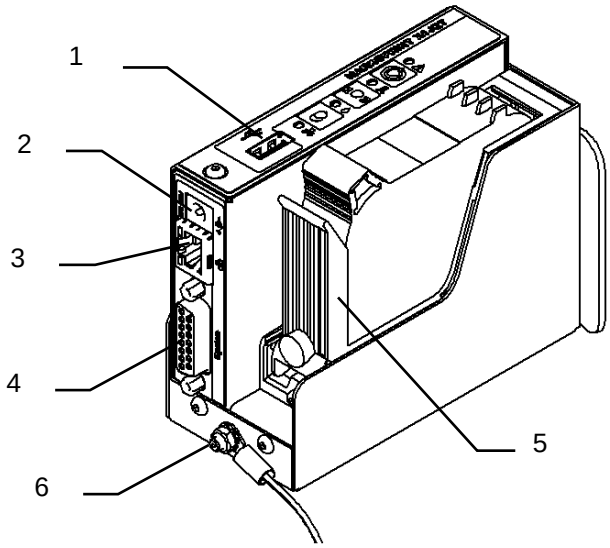

Fig. 5-2: X1JET HP Right hand-model

No.	Description
1	USB-A SOCKET
2	POWER-SOCKET
3	NETWORK CONNECTION (RJ45)
4	OPTION (SUB-D 15 POL)
5	INK CARTRIDGE CLAMP
6	GROUND CONNECTION

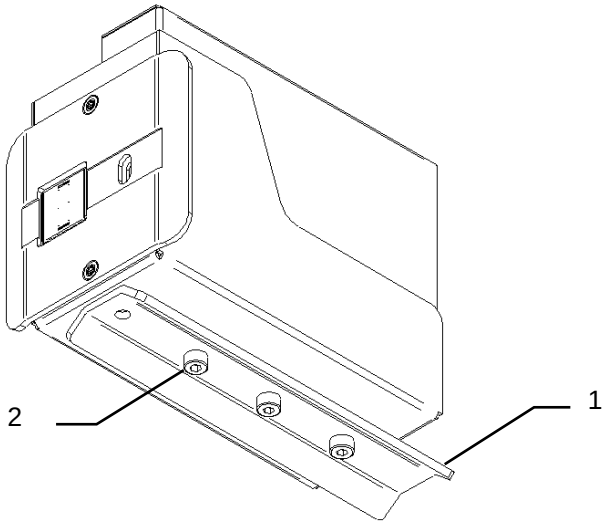

Fig. 5-3: X1JET HP Righthand-model

No.	Description
1	MOUNTING RAIL; OPTIONAL EXTRAS
2	FASTENING POINTS (M4)

Right hand-/Left hand-model

The Markoprint X1JET HP/ -Premium is delivered as right hand-model standard. I.e. the preferred print direction is from left to right. When printing from right to left, the minimum print start is 25 mm to the box front edge. If a lower distance is desired, an external photo sensor must be installed or the system can be modified to left-hand. Both models are shown in the figure below.

right hand-model left hand-model

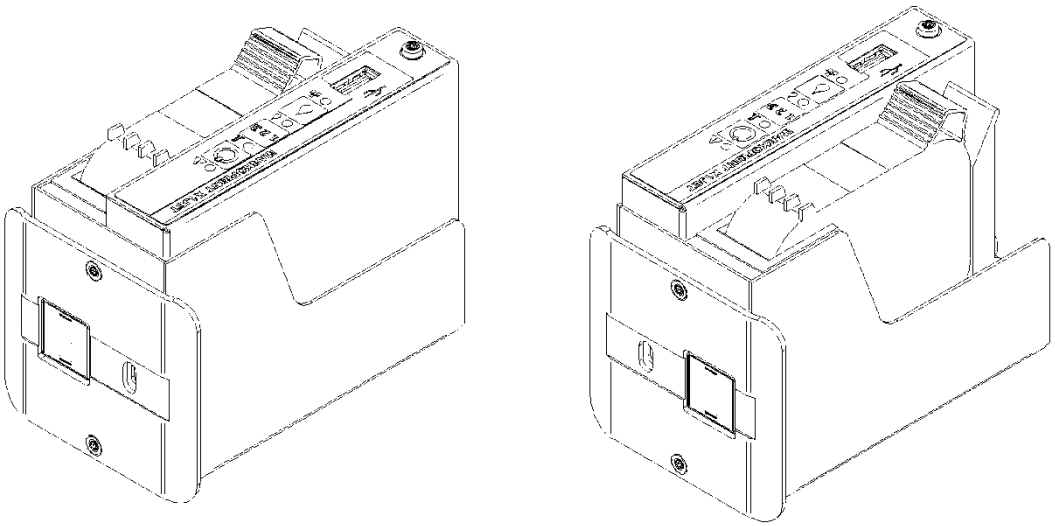

Fig. 5-4: X1JET HP in Righthand- and Lefthand-model

Complete overview X1JET HP Premium

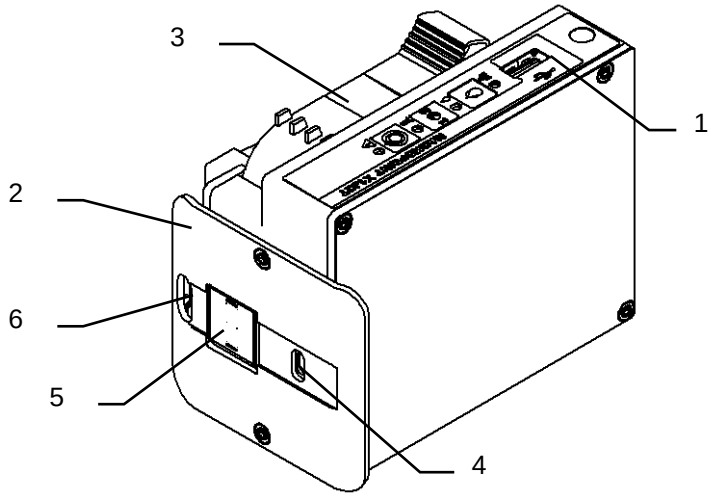

Fig. 5-5: X1JET HP Premium

No.	Description
1	CONTROL PANEL WITH ENTRY KEYS AND LED-STATUS LIGHTS
2	FRONT PANEL
3	INK CARTRIDGE
4	OPENING FOR INTERNAL LIGHT BARRIER
5	CARTRIDGE NOZZLE PLATE
6	OPENING FOR EXTERNAL LIGHT BARRIER

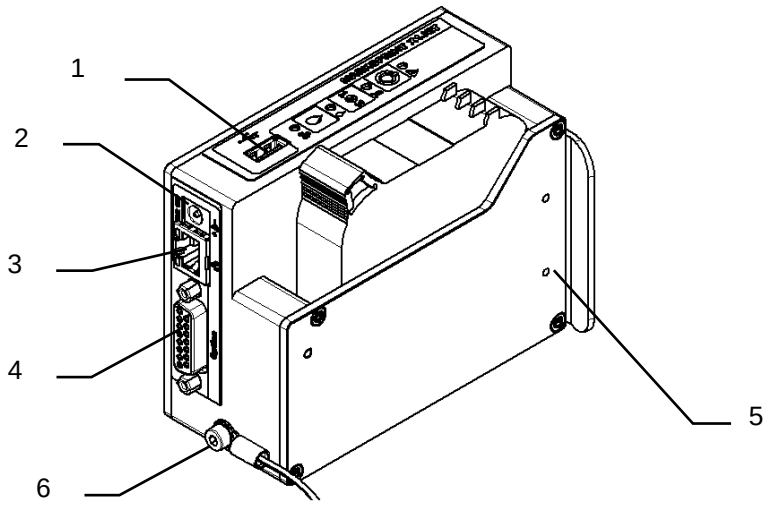

Fig. 5-6: X1JET HP Premium

No.	Description
1	USB-A SOCKET
2	POWER-SOCKET
3	NETWORK CONNECTION (RJ45)
4	OPTION (SUB-D 15 POL)
5	EXTERNAL LIGHT BARRIER (OPTION)
6	GROUND CONNECTION

Flexible bracket (Flexbracket)

The Flexbracket is an optional available mounting bracket, which adjust a variable distance up to 20 mm between print system and product. The print system is provided with a special formed deflector and a linear movable bracket.
The print system is mounted on the production line that the product hit the deflector. The print system is pressed in position, against the spring power of the Flexbracket. After the product passes the print system moves the print system by spring power back in starting position.

The Flexbracket should use for print speeds up to 30 m/min. For higher speeds is a constant guide not guaranteed and the print result can be manipulate negative.

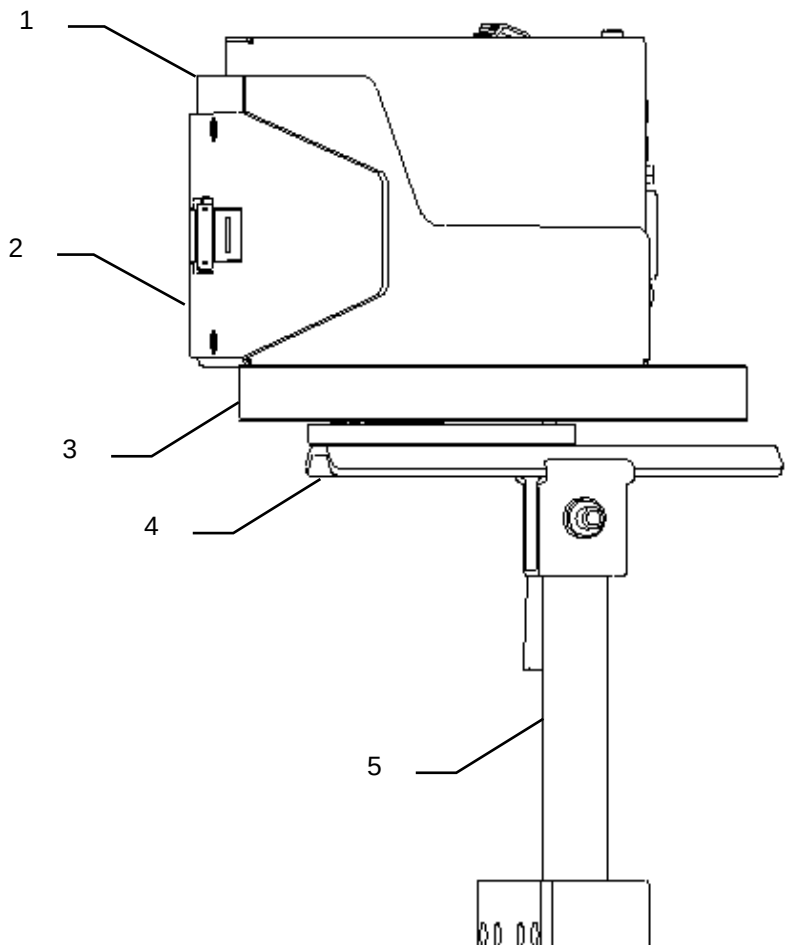

Fig. 5-7: X1JET HP with Flexbracket and universal mounting bracket

No.	Description
1	CONTROL SYSTEM
2	FLEXBRACKET DEFLECTOR
3	FLEXBRACKET
4	MOUNTING RAIL
5	CLAMP BRACKET

Name plate

The nameplate is attached to the bottom of the system and displays the following:

- System type
- Serial number
- MAC-address
- Article number
- Supply voltage
- Power consumption
- Address of manufacturer

6. Installation and Initial Operation

Safety notes

WARNING

Danger to life through electric shock!

DANGER TO LIFE!

Contact with live parts poses imminent danger to life. Damaged insulation or individual components can be lethal.

Therefore:

- Immediately switch off the power supply and initiate repairs if the insulation is damaged.
- Work on the electrical system may only be performed by electricians.
- Before working on the electrical system, disconnect from the mains (remove mains plug) and check that power is off.
- Always disconnect mains before performing cleaning and repair tasks.
- Keep moisture from live parts. Moisture may cause a short-circuit.

CAUTION

Risk of stumbling posed by dirt, objects lying about and connecting lines!

RISK OF INJURY!

Dirt, objects lying about and connecting lines for power, data- and signal lines may cause slipping and stumbling resulting in severe injuries.

Therefore:

- Always keep working area clean.
- Remove objects no longer required.
- Mark stumbling areas with yellow-black marking tape.
- Non tension connecting lines to system and pass it that no places of danger do arise

CAUTION

Edges and corners pose risk of injury!

RISK OF INJURY!

Sharp edges and pointed corners may cause abrasions and cuts to the skin.

Therefore:

– Be cautious when working near sharp edges and pointed corners.
– If in doubt, wear protective gloves.

Installation

Only an optimally aligned installation of the system can ensure a continuous operation with a low rate of failures and a minimum wear. For an optimized installation of the system, fine tunings adapted to environmental conditions are essential. For the fine tunings, a complex expert knowledge is required basing on experience with print technique.
The complexity of a wear-optimized installation requires a high measure of specialized knowledge and experience, which cannot be obtained completely by reading this manual. Therefore the installation of the print system must be made by a technician from your local distributor or examined by a final inspection. Damage or damages based on an incorrect installation, represent no case of warranty.

Requirements to the Site of Installation

When choosing the installation location the following conditions apply:

- Consider the generally accepted ergonomic criteria in accordance with workplace ordinances as well as country-specific legislation.
- The installation location must be a dry and dust-free room, ideally with an ambient temperature of approx. 18…25 °C.
- The installation location may not be subject to fast temperature fluctuations (condensation!).
- Do not set up the controller directly next to or above hot surfaces, since this will affect cooling of the controller.
- If the controller is operated on a tripod (accessory), the stability of the tripod on an even foundation must be ensured.
- The controller may not be exposed to flammable, explosive, corrosive gases or chemical vapors.
- The controller may not be installed in the vicinity of high voltage equipment or power supplies.
- The controller may not be subjected to direct vibrations or shocks.
- Keep controller away from oil or water.
- The controller may not be exposed to strong magnetic or electric fields.

Placing the Print System

- The installation position has to provide sufficient access for user and service technician.
- Observe that all mounting parts are fixed sufficiently.
- Consider all points of the "Intended Use" in the chapter safety regulations.

To achieve a clean, sharp print result the distance from the product to be printed to the cartridge nozzle plate is important. The optimum distance is 0 to 4 mm between the deflector and the product. A greater distance will adversely affect the print result, particularly at high conveyor belt speeds.
The higher the print speed the shorter must be the distance. At speeds of less than 20 m/min a distance of up to 4 mm between the nozzle plate and the product may still be acceptable.

Flexbracket installation

NOTICE

Material damage due to improper print system installation!

With the print system switched on, a defect may occur in the system electronics.

Therefore:

– Only install the system when it is switched off.

Required Resources

- Screwdriver Torx®, SW TX10
- Allen key ® SW 2,5
- Allen key ®, SW 3

Instruction

Please install the Flexbracket as follows:

Step	Procedure
1	Disconnect both fixing bolts (this will used again) of the deflector and remove it from the system unit (see Fig. 6-1).

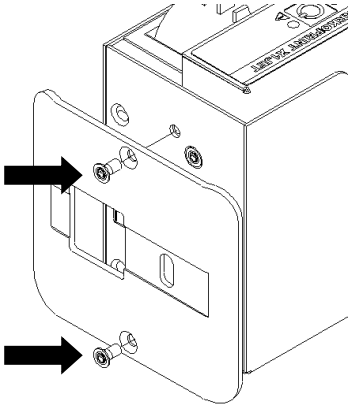

Fig. 6-1: Disassembly deflector

2	Put the Flexbracket-deflector on the system unit and tighten it with both fixing bolts (see Fig. 6-2).

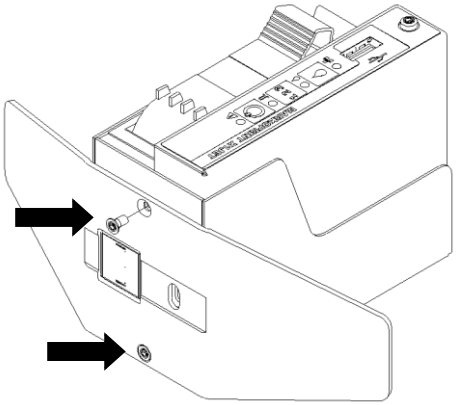

Fig. 6-2: Flexbracket-deflector installation

Step	Procedure
3	If a mounting rail is already mounted under the system unit, disconnect the fixing bolts and remove the mounting rail (see Fig. 6-3).

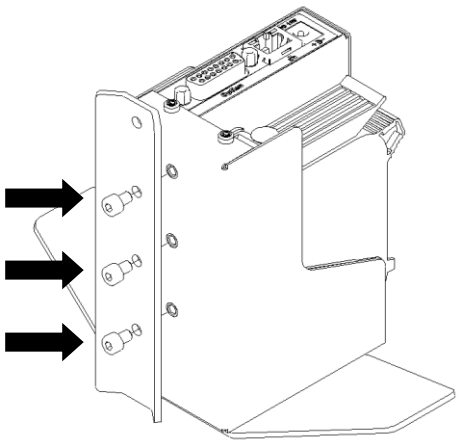

Fig. 6-3: Disassembly mounting rail

4	**The slide of the Flexbracket must be pull in such a position that the borings for the insertion and tightening of the fixing bolts are available. Furthermore the pull spring at the Flexbracket must be push away laterally.** Set the fixing bolts in the counterbore of the Flexbracket. Positioning the Flexbracket on the system unit and tighten (see Fig. 6-4).

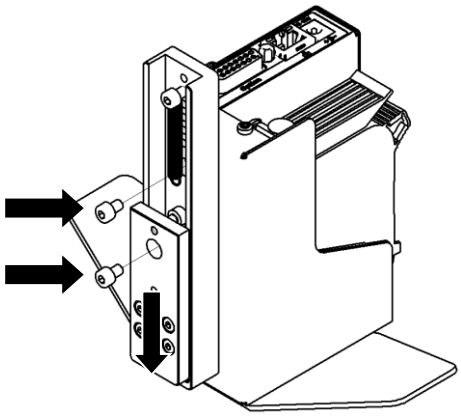

Fig. 6-4: Flexbracket installation

5	Proceed with the installation like described in → **Chapter** Positioning the Print System, **page** 42

Positioning the Print System

NOTICE

Material damage due to improper print system installation!

With the print system switched on, a defect may occur in the system electronics.

Therefore:

– Only install the system when it is switched off.
– Network cables only connect or disconnect if the power supply is dead voltage.

NOTICE

Possible material damages!

Product mounting rails prepared by the customer protect the system unit from vibrations and damage whilst the product is passing the system unit. (Position B in Fig. 4)

Required Resources

- Setscrew wrench (Allen key®)

Instruction

Please install the print system as follows:

Step	Procedure
1	Attach mounting brackets to the production line.
2	Insert the mounting rail fitted underneath the controller into the clamping piece of the mounting holder and lock.

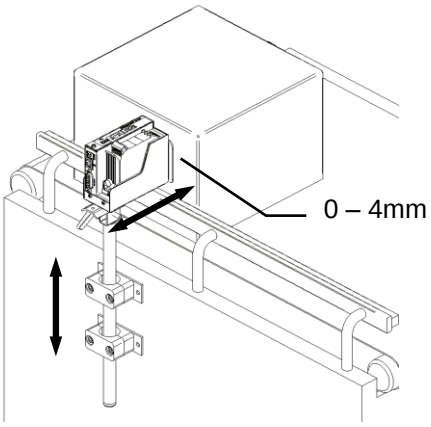

Fig. 6-5: Installation of the X1JET HP at the production line

3	Set the distance from the print head to the product surface. A distance of 0 to 4 mm is optimal. (see Fig. 6-5)

Connecting the Print System

NOTICE

Possible material damages!

To prevent faults due to potential differences, an electro-conductive connection between control unit and conveyor belt must be established.

NOTICE

Material damage due to induced currents!

If the connection cables of the controller run close to high voltage or heavy current cables in the cable duct, induction may cause malfunctioning or damage.

Therefore:

– Lay all connection cables of the controller spatially separate from high voltage and heavy current cables.

The Print system needs electricity for its functions. Please find more details in the chapter “Technical Data”.

Overview of the print system connectors

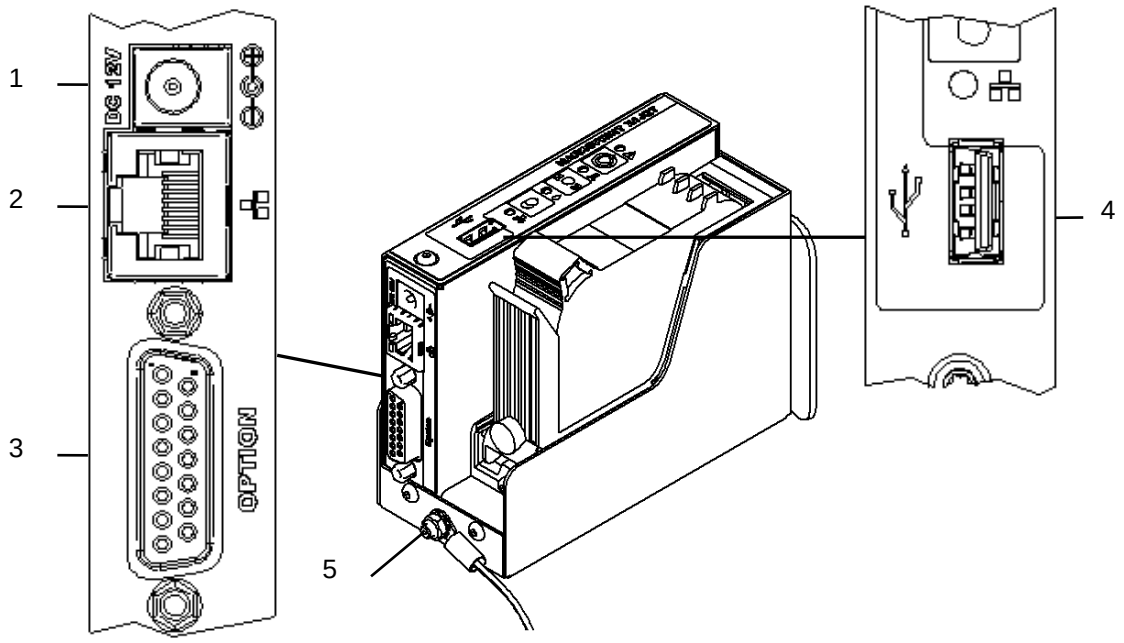

Fig. 6-6: Electrical connections

No.	Description
1	POWER SUPPLY
2	ETHERNET
3	OPTIONS
4	USB-A
5	GROUND CONNECTION

Ground print system

Instruction

Please connect the ground connection of the print system with ground connection of the conveyor as follows:

Schritt	Vorgehen
1	Connect the ground connection of the print system with ground of the conveyor.

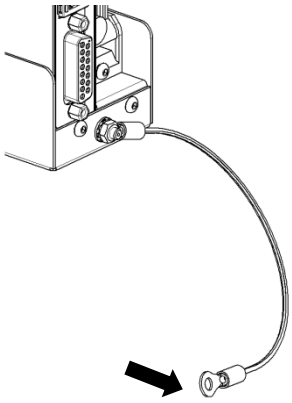

Fig. 6-7: Ground connection at the print system

Connecting to Supply Voltage

Requirements

- Power supply according to "Technical Data" is installed close (max. 1,5 m away) to the printing site.

Instruction

Please connect the print system with supply voltage as follows:

Step	Procedure
1	Enclosed the power supply are several country-specific power plugs. Mount the right power plug to the power supply (see Fig. 6-8).

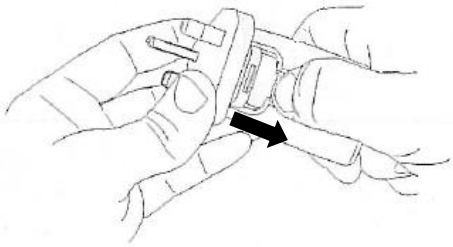

Fig. 6-8: Installation power plug

2	Connect the power plug to the power socket on the X1JET. (DC 12V).
3	Connect the power pack with the power supply.

Connecting the optional Shaft Encoder

If more options will be used simultaneously, a splitter-box (Art.-No.: 7280000) can used.

Requirements

- The optional shaft encoder is mounted at the production line.
- Ideally runs the measuring wheel of the shaft encoder on the conveyor belt, near the print system.

Instruction

Please connect the optional shaft encoder with the print system as follows:

Step	Procedure
1	If necessary install the optional shaft encoder on the production line and connect it to the option-connection socket.

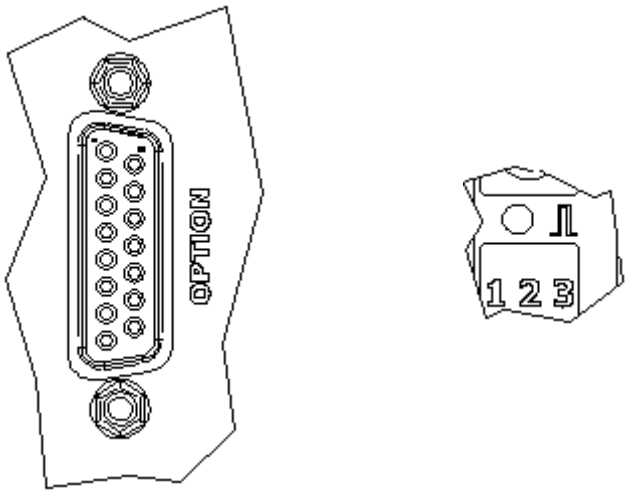

Fig. 6-9: Option-Socket (Sub-D 15-pole) on the system-back and Sensor-LED on the top side of the system

2	Set the system-clock to Shaft encoder by the iDesign software. (System settings – Print parameter)
3	Set the shaft encoder resolution by the iDesign software. 600 dpi with the delivered shaft encoder from Weber. (System settings – Print Parameter)
4	Set the intensity by the iDesign software so, that the desired effective resolution can be reached. (System settings – Print parameter)
5	The Sensor / Encoder LED lights red, if the shaft encoder isn’t connected or doesn‘t rotate.

Connecting the optional Product Sensor

If more options will be used simultaneously, a splitter-box (Art.-No.: 72900545) can used.

Requirements

- The optional product sensor is mounted at the production line or on the X1JET HP Premium system unit.

When mounting on the production line:

- The sensor is mounted in product running direction, near the X1JET HP.
- Between the sensor and the nozzle plate is maximum a product, because another print activation is otherwise ignored

Instruction

Please connect the optional product sensor with the print system as follows:

Step	Procedure
1	If necessary install the optional product sensor on the production line or on the X1JET HP Premium and connect it to the option-connection socket.

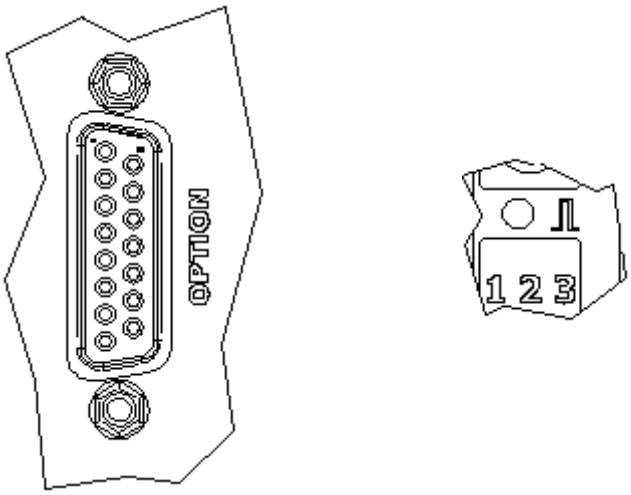

Fig. 6-10: Option-Socket (Sub-D 15-pole) on the system-back and Sensor-LED on the top side of the system

2	Set the sensor input of the system to External by the iDesign software. (System settings – Advanced settings - Periphery)
3	The Sensor LED lights green with print activation from product identification to the end of the print.
4	If no print image is loaded, the Sensor LED lights yellow as long as the sensor is covered.

Connection to a network

A RJ-45-connection allows a connection of the print system to the customer LAN (Local Aera Network).
The LED on the top of the system lights green if a network is available. The LED flashes yellow with data communication.

Instruction
Please connect the print system with the network as follows:

Step	Procedure
1	If required connect the print system to the network by a RJ45 socket.

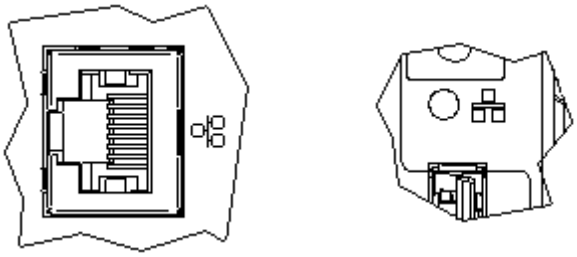

Fig. 6-11: Ethernet-socket (RJ 45) on the system-back and network LED on the top side of the system.

2	Set the desired IP address by the iDesign software. (System settings – System Config – IP-Address)
3	Add the system in the iDesign software to oprate it by the iDesign software. (Connections – Add system – Enter name and IP address)

Each IP address can place in a network once only. Otherwise there is an address conflict and the system can't address. Please contact your system administrator.

Inserting Ink Cartridge

X1JET HP

If a new ink cartridge is inserted, the cartridge counters must be reset.
Not necessary for MK2 system with SmartCard control
→ ***Chapter*** Reset ink **counter**, ***Page*** 63

Use the ink cartridge as soon as possible after having removed the protective foil or the cartclip.

Instruction
Please insert the ink cartridge in the print system as follows:

Step	Procedure
1	Remove the protective foil or CartClip from the nozzle plate an insert the ink cartridge in the holder.
2	Before replacement of the cartridge, wipe the nozzle plate once with a lint-free cloth.
3	Move the stop lever for the ink cartridge in the unlocked position.
4	Insert the ink cartridge in the cartridge holder diagonally (see Fig. 6-12).

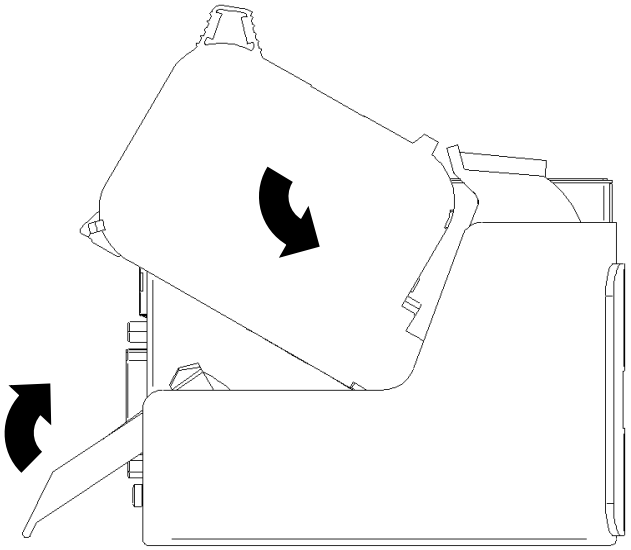

Fig. 6-12: Insert the ink cartridge

5	Lock the stop lever for the ink cartridge.

The correct position of the ink cartridge is displayed by the Ink-LED. The LED lights green after resetting the cartridge counter and after inserting a new ink cartridge.

X1JET HP Premium

If a new ink cartridge is inserted, the cartridge counters must be reset.
→ ***Chapter*** Reset ink **counter**, ***Page*** 63

Use the ink cartridge as soon as possible after having removed the protective foil or the cartclip.

Instruction

Please insert the ink cartridge in the print system as follows:

Step	Procedure
1	Remove the protective foil or CartClip from the nozzle plate an insert the ink cartridge in the holder.
2	Before replacement of the cartridge, wipe the nozzle plate once with a lint-free cloth.
3	Insert the ink cartridge in the cartridge holder diagonally (see Fig. 6-13).

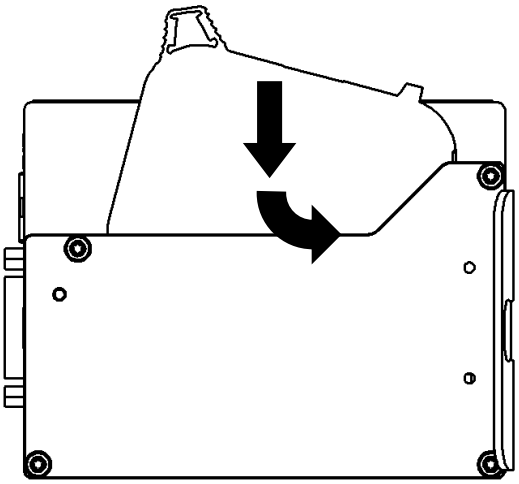

Fig. 6-13: Insert the ink cartridge

4	Click the ink cartridge by lightly pressure at the end.

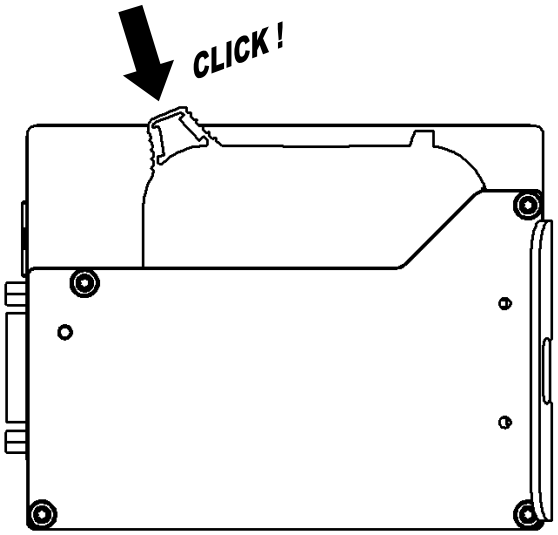

Fig. 6-14: Fixing the ink cartridge

The correct position of the ink cartridge is displayed by the Ink-LED. The LED lights green after resetting the cartridge counter and after inserting a new ink cartridge.

Removing Ink Cartridge

X1JET HP

NOTICE

Damages by misuse!

An electronic fault can't waive with a going print process and simultaneous removing of the cartridge.

Therefore:

– Only change the cartridge when the print process is stopped.

Instruction

Please remove the ink cartridge from the print system as follows:

Step	Procedure
1	Unlock the stop lever for the ink cartridge.
2	Remove the ink cartridge from the cartridge holder. (see Fig. 6-15)

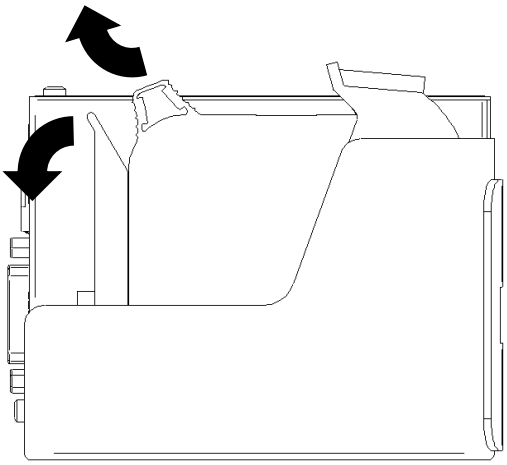

Fig. 6-15: Remove the ink cartridge

X1JET HP Premium

NOTICE

Damages by misuse!

An electronic fault can't waive with a going print process and simultaneous removing of the cartridge.

Therefore:

– Only change the cartridge when the print process is stopped.

Instruction

Please remove the ink cartridge from the print system as follows:

Step	Procedure
1	Press diagonal upwards at the end of cartridge.
2	Tip the cartridge from behind upwards. (see Fig. 6-16)

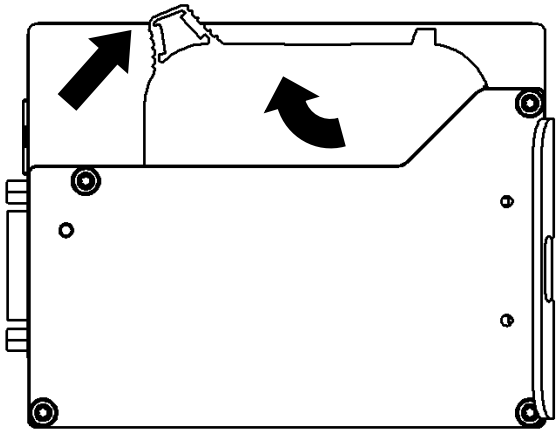

Fig. 6-16: Remove the ink cartridge

7. Operation

User interface of the print system

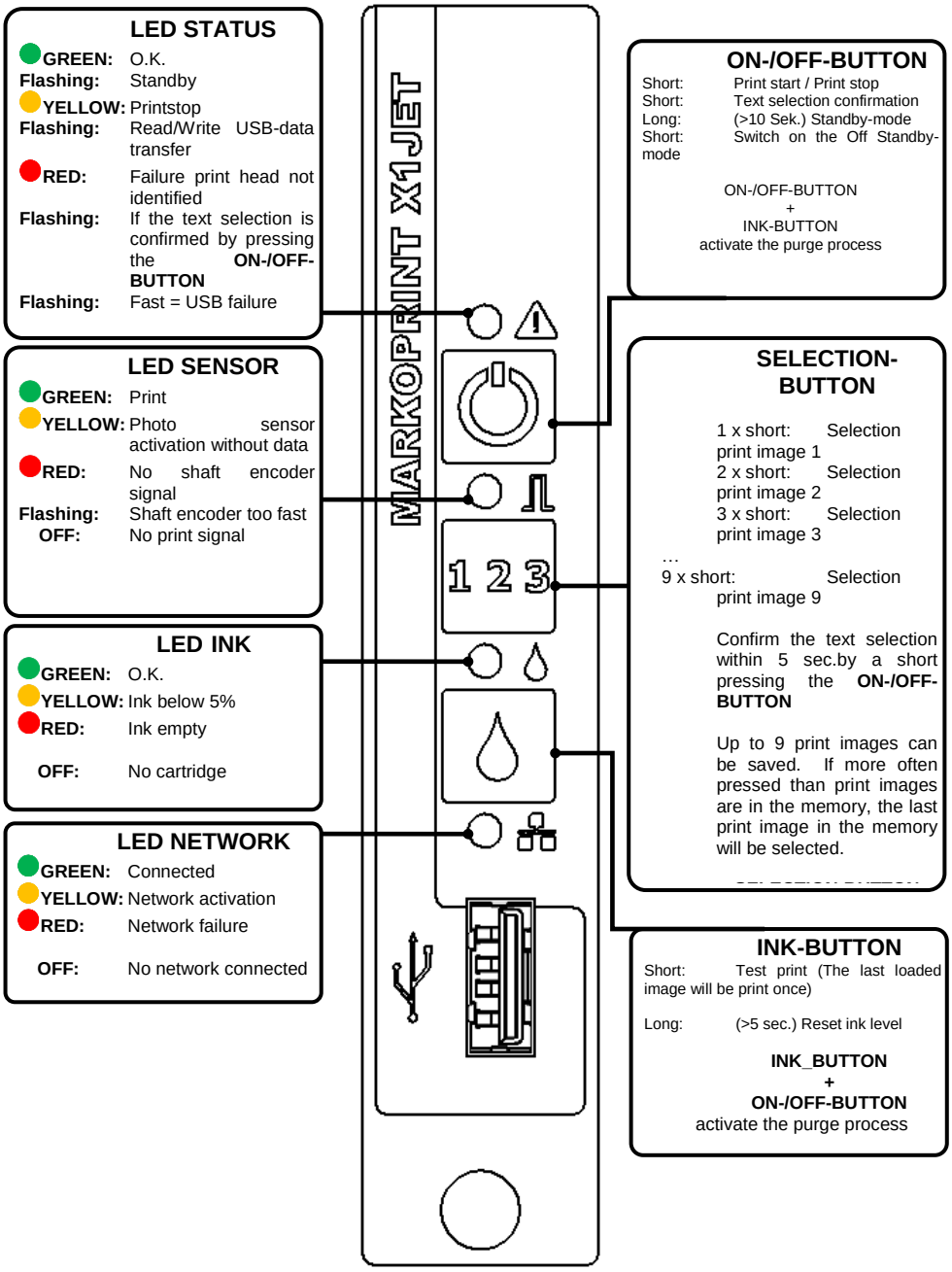

Fig. 7-1: User interface on the top side of the system

When starting the system unit the progress of the starting process can be monitored on the LED's. If errors occur during booting, an error code is transmitted via the LED's and can be analyzed in more detail.

→ ***Chapter*** Boot-LED messages, ***Page*** 93

Switching ON

Requirements

- The print system is connected with power.
- The system is in standby-mode

Instruction

Please switch the print system on as follows:

Step	Procedure
1	Press short on the [ON-/OFF]-Button on the top side of the print system.
	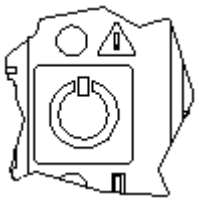 Fig. 7-2: ON-/OFF-BUTTON on the top side of the system
2	The system conducts a self-test and is ready to use after approx. 10 seconds.

Switching OFF

Requirements

- The print system is connected with power and switched on.

Instruction

Please switch the print system off as follows:

Step	Procedure
1	Keep the [ON-/OFF]-Button on the top side of the print system pressed for approx. 10 seconds. The print system passes to standby mode.
	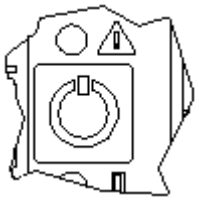 Fig. 7-3: ON-/OFF-BUTTON on the top side of the system
2	The Status LED flashes every 10 seconds shortly in the standby-mode.
3	Disconnect the power supply from the print system for a completely switch off.

Print Stop

Instruction

Please activate a Print Stop / a Print Pause as follows:

Step	Procedure
1	Presses once short the [ON-/OFF]-Button on the top side of the print system. 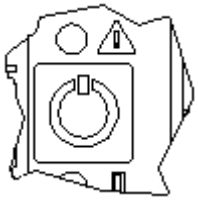 Fig. 7-4: ON-/OFF-BUTTON on the top side of the system
2	The Power LED lights yellow on print stop.

Print Start

Instruction

Please activate a Print Start as follows:

Step	Procedure
1	Presses once short the [ON-/OFF]-Button on the top side of the print system. 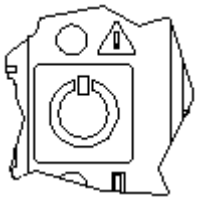 Fig. 7-5: ON-/OFF-BUTTON on the top side of the system
2	The Power LED lights green with successful print activation.

Select Print Image

Up to nine print images can be saved in the memory of the Markoprint X1JET HP/ -Premium for a direct call up at the system unit.

Instruction

Please select a print image as follows:

Step	Procedure
1	To select the saved print image, ranks third, press the [SELECT]-Button three times short.
	 Fig. 7-6: SELECT-BUTTON on the top side of the system
2	To confirm the text selection pressing the [ON-/OFF]-Button within 5 seconds.
	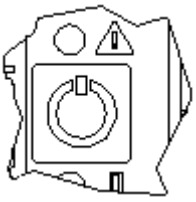 Fig. 7-7: ON-/OFF-BUTTON on the top side of the system
3	After pressing the [ON-/OFF]-Button, the selected text is confirmed with the flashing STATUS LED. I.e. if text 3 is selected, the STATUS LED flashes three times.
	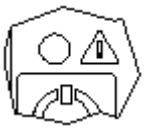 Fig. 7-8: Status-LED on the top side of the system
4	The print images 1.00I to 9.00I can selected for printing in this way.

Loading Print Image

Print Images can load to the Markoprint X1JET HP/ -Premium print system as follows:

- USB-Stick
- Software iDesign with existing network connection via RJ45 or
- By serial interface EIA 232

Load print images incl. fonts, logos and parameter with a USB-stick automatically.

The files can load to a USB-stick by iDesign.

After the connection of a USB stick an automatic run of commands will be made to query the system status.
At the same time a directory „Markoprint“ and a subdirectory with the name of the serial number of the system, i.e. „L12003-x1“ will be created in the main directory of the USB stick. There will be saved all system specific data.
The stick must be connected once on the system to post this information, so that the iDesign software can work with the system after that.

The transfer of the data and commands happen by the Markoprint X1JET HP/ -Premium directly after the connection of the stick. After this the „Status.ast“ file is created.

Process:
After the connection and identification of the stick, the data will be read from the stick and the Status LED flashes quickly meanwhile (4x/second)
Thereafter, data written on the stick and the Status LED flashes slowly meanwhile (2x/second)
If the LED lights constant, the stick can removed after 2 seconds.

Load print image with a USB-Stick

Needed tools

- USB-Stick

Requirements

- The used USB stick was connected for a „Initialisierung“ to the Markoprint X1JET HP/ -Premium print system.
- The print image, created with the iDesign Software, is transferred to the USB stick.

Instruction

Please load the print image from the USB-Stick to the memory of the Markoprint X1JET HP/ -Premium print system:

Step	Procedure
1	Connect the USB-Stick to the USB-socket on the top side of the print system.

Step	Procedure
	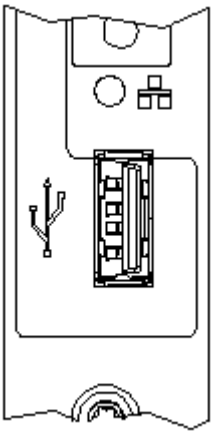 Fig. 7-9: USB-A socket on the top side of the system
2	Wait until the data exchange is completed. The STATUS LED flashes during the data exchange and lights constant after finishing.
	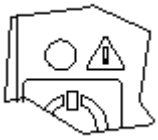 Fig. 7-10: STATUS-LED on the top side of the system
3	Remove the USB-Stick from the print system (2 seconds after the LED flashes constantly).

If the USB-stick is removed early or during data transfer, it can happen a data loss.

Set print start delay

Change the print start delay on the system with a key combination.

Instruction

Please set the print start delay on the system as follows:

Step	Procedure
1	Press the [SELECT]-button and [ON-/OFF]-button to increase the print start delay.
	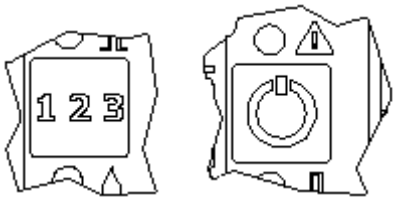 Fig. 7-11: SELECT-BUTTON and ON-/OFF-BUTTON
2	The delay increases about 1 mm with each keypress.
3	Press the [SELECT]-button and the [INK]-button to decrease the print start delay.
	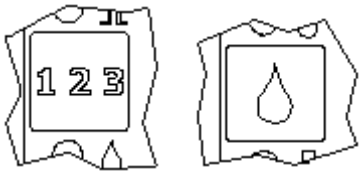 Fig. 7-12: SELECT-BUTTON and INK-BUTTON
4	The delay decreases about 1 mm with each keypress.

Loading Print Image with iDesign

Requirements

- The Markoprint X1JET HP/ -Premium print system is connected with the iDesign Software by a network or serial interface.

Instruction

Please load a print image from iDesign to the memory of the Markoprint X1JET HP/ -Premium print system as follows:

Step	Procedure
1	Select the menu Functions on the left side of iDesign
2	If several print systems are connected with the iDesign software, click on the illustration of the corresponding print system which shall be selected.
3	Click on the button [Print].
4	Select the desired directory by pressing the directory button. The print images, saved in iDesign can be found in the directory C:\user\public\iDesign\label standard.
5	Click to select the desired print image. The selected print image is shown in the preview.
6	Click on the button [Print start] to print the selected print image. A window with “Print start ok” is shortly shown for the confirmation.

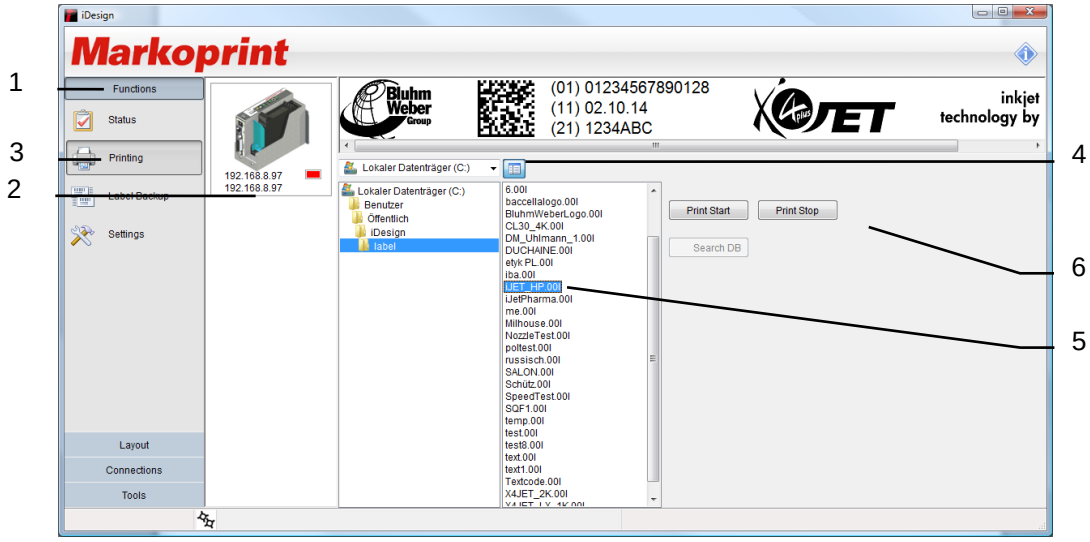

Fig. 7-13: Print image selection in iDesign

Setting of the parameter by iDesign software, i.e. Print Start Delay

The print start delay can be set in this menu, i.e. by how much is printing delayed in millimeters after the product is detected by the light barrier.
The delay can be selected between 0 and 999 millimeters.
The print start delay relates to the beginning of the print layout.

Requirements

- The Markoprint X1JET HP/ -Premium print system is connected with the iDesign software via a network or serial interface.

Instruction

Please set the print start delay via the iDesign software as follows:

Step	Procedure
1	Select the menu Functions on the left side of iDesign.
2	If several print systems are connected with the iDesign software, click on the illustration of the corresponding print system which shall be selected.
3	Click on the button [Settings].
4	Click on the menu slide „Print parameter“ to call up the corresponding menu.
5	Set up the print start delay by click on the arrow keys or by input via keypad.

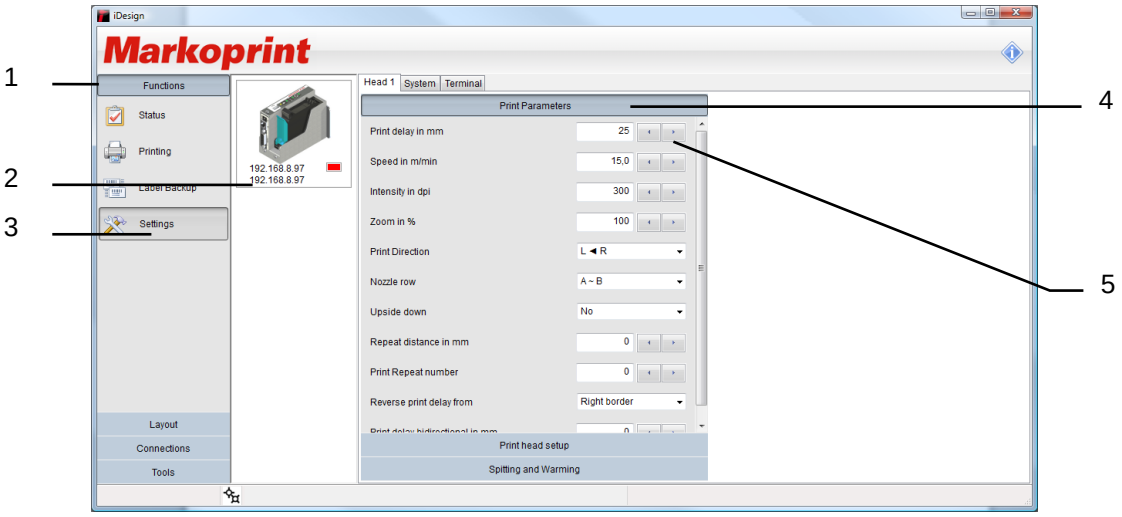

Fig. 7-14: Set up the print start delay in iDesign

Reset ink counter

The ink counter must be reset after inserting a new ink cartridge.
Not necessary for MK2 system with SmartCard control

Instruction

Please reset the ink counter as follows:

Step	Procedure
1	Press the [Ink]-button longer than 5 seconds.
	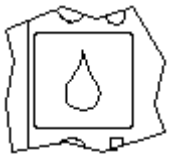 Fig. 7-15: INK-BUTTON on the top side of the system
2	The green Ink LED lights after a successful reset.
	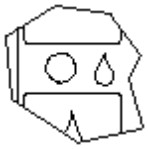 Fig. 7-16: INK-LED on the top side of the system

The Ink LED lights yellow by nearly empty cartridge (<5%).
The Ink LED lights red by empty cartridge.

Calculate ink content

An ink HP cartridge contains 42 ml of ink, equivalent to 1.26 billion ink droplets of approx. 33 pl each. The system counts the ink droplets printed and uses this to calculate the ink consumption.
This function is only correct if the ink counter is reset when a new ink cartridge is inserted.
The ink content can also be determined by weighing:
A full HP cartridge weighs approx. 110 g ± 3 g. An empty cartridge weighs approx. 70 g ± 5 g. The residual ink in an empty cartridge is 3 ml max.

To rinse the nozzles manually

NOTICE

Material damage due to squirting ink!

During spitting, squirting ink soils the surroundings.
Therefore:

– Hold an absorbent cloth in front of the ink cartridge nozzle plate.

After extended periods of no printing, it may be necessary to rinse the ink cartridges to open up clogged nozzle channels again.
During rinsing (purging), all ink cartridge nozzle ducts are addressed to eject some ink. The rinse process takes max. 2 seconds or rather so long as the button will be pressed and hold.

Needed tools

- Absorbent cloth
- Or paper / cardboard

Instruction

Please rinse the nozzle channels as follows:

Step	Procedure
1	Hold a absorbent cloth on front of the nozzle plate of the ink cartridge.
2	Press the [ON / OFF]-button and the [INK]-button on the top of the system simultaneously.
	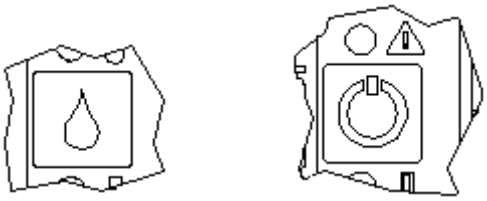 Fig. 7-17: [ON / OFF]-button and [INK]-button on the top of the system
3	Wipe the nozzle plate off carefully to remove excess ink.

Web-Interface

The WEB Interface basically behaves like the X2JET / X4JET plus Touch operation.

The WEB Interface can only be called from one terminal at the same time!
If the WEB Interface of a print system should be operated by another terminal, the existing connection must stop before!

An intro is displayed after starting the WEB Interface.
To skip the intro, click on this.

The version number of the system firmware is also displayed.

After that, the status screen is displayed, from which can be navigate.

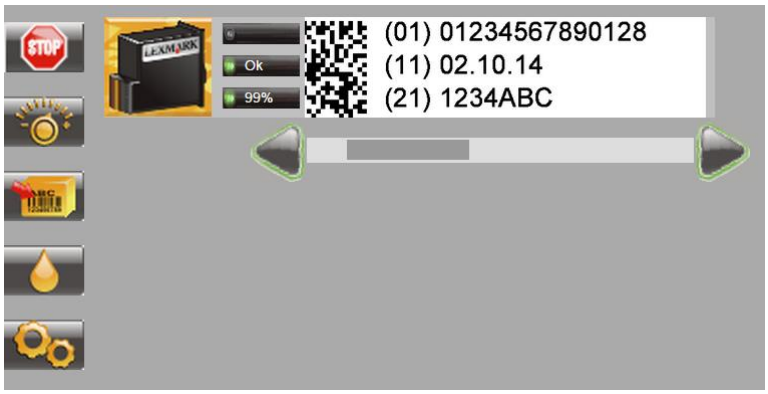

Use the arrow keys to scroll through the print image.

By a click on the print image, the print image name, the number of the previously print image and the number of prints of the selected print image, which can be print with a full cartridge, are displayed.

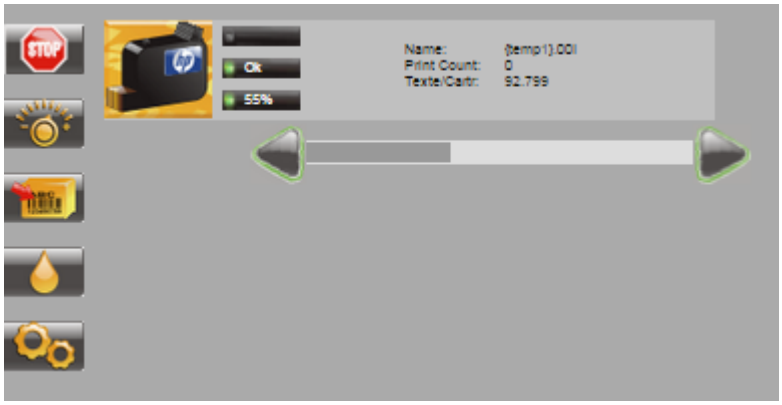

The print can pause with  .

The print can start again or another print image can select with  .

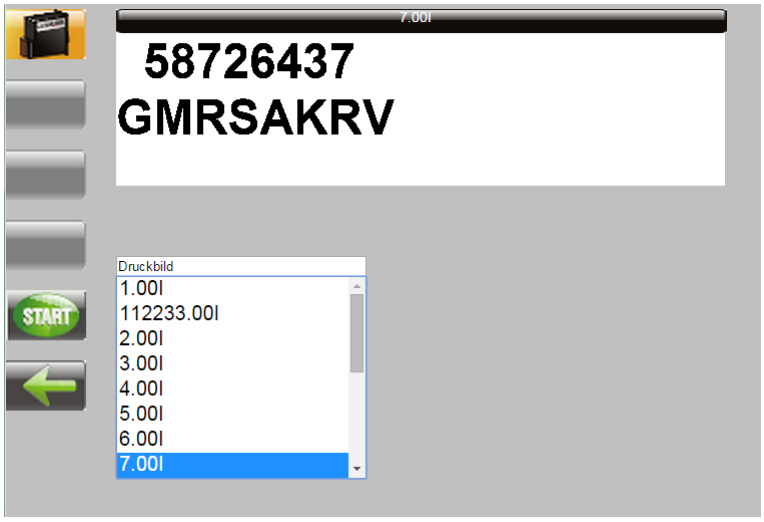

The selected print image can start with  .

The last loaded and paused print image restarts with  .

Variable fields are queried each time before a print image starts:

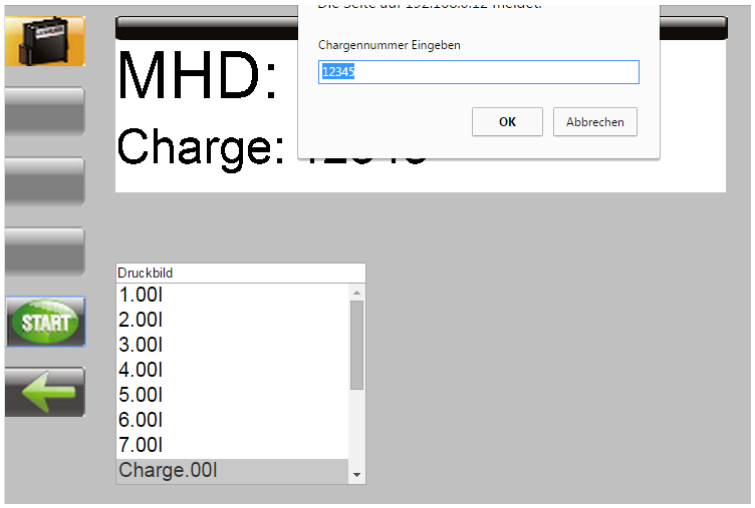

Parameter settings can be selected and changed with  :

With the  button:

- a print image can call up for print start
- a print image can be changed
- a new print image can be created.

See also Operation Manual X2JET / X4JET plus Touch.

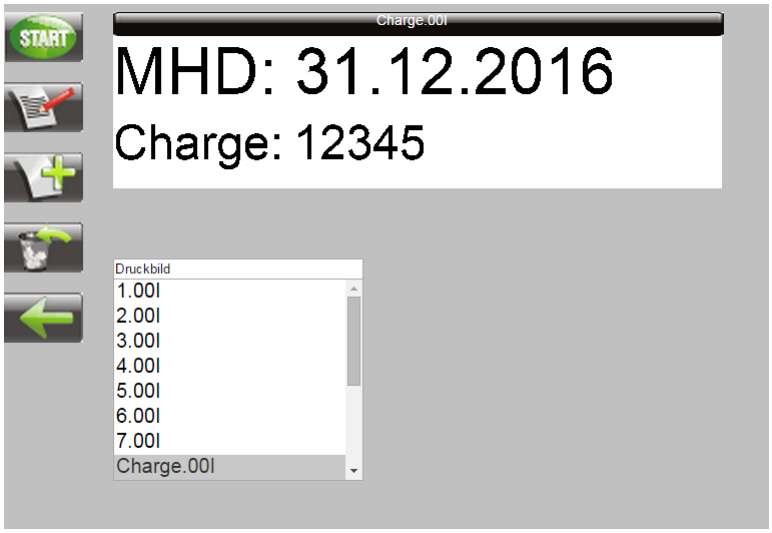

Change the ink settings with  .

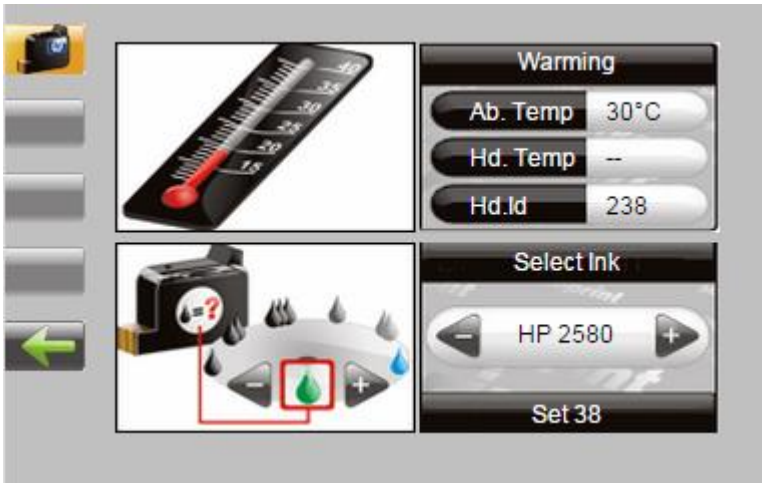

Call up and change the system settings with  :

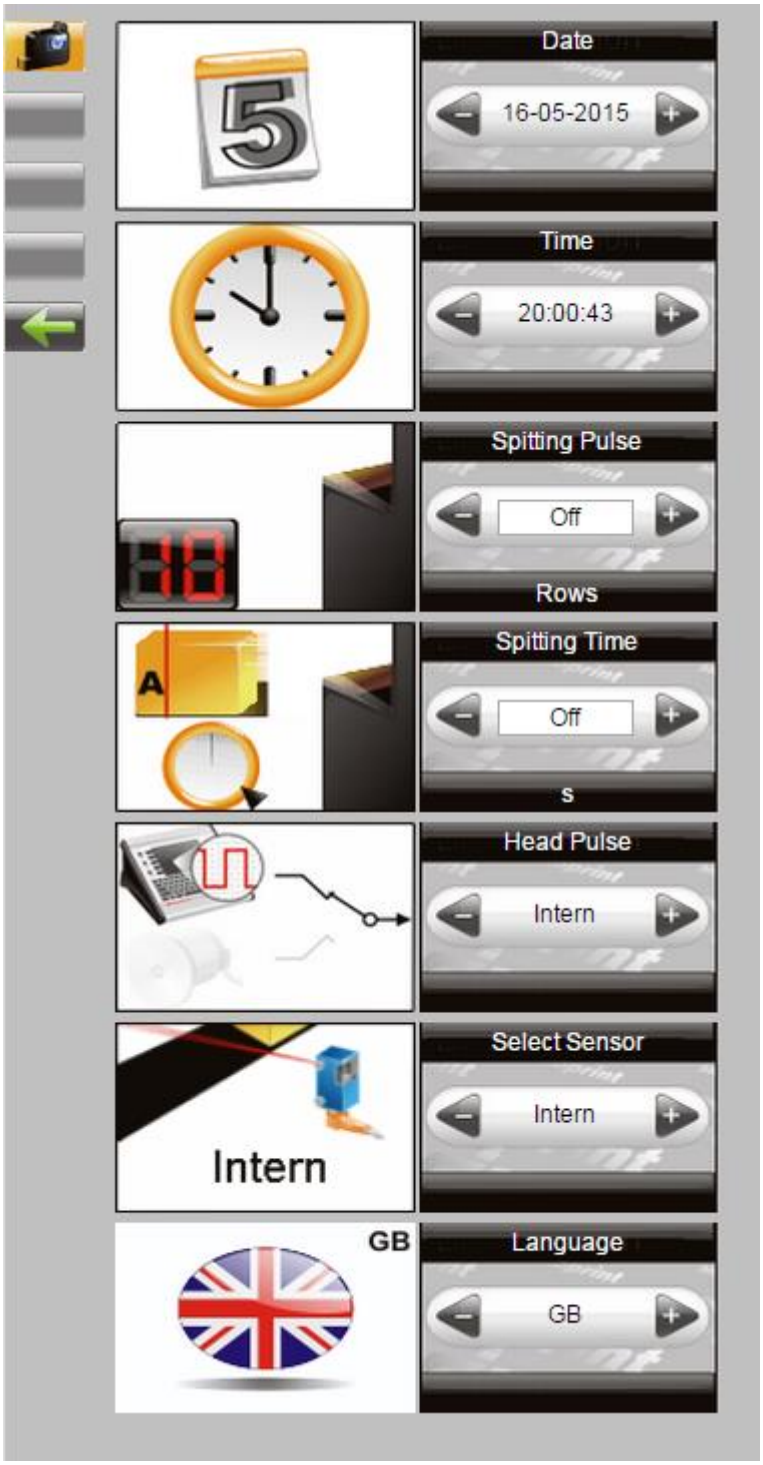

Configurable In-/Outputs

NOTICE

Material damage due to short-circuit!

The outputs are open Collector outputs and may load with max. 100 mA.

The **Markoprint X1JET HP**/ -Premium has at the 15-pole option socket two in- and four outputs. A variety of configurations are possible and so the connectors for output of status messages (OK, Warning, Error), cartridge level messages (5% low / empty), print ready and print pulse are possible to use. On the input side signals for heating, spitting, print direction, upside print, stop and text selection are possible.
The texts for input 1 must be called „!EXT00.00I“ and „!EXT01.00I“ with an external text selection by the inputs. The texts „!EXT00.00I“ to „!EXT03.00I“ can be assigned if both inputs are used.

The setting can be done with iDesign Software in *Functions → System settings → Advanced settings* or via Web-Browser in *Settings → Advanced settings*.

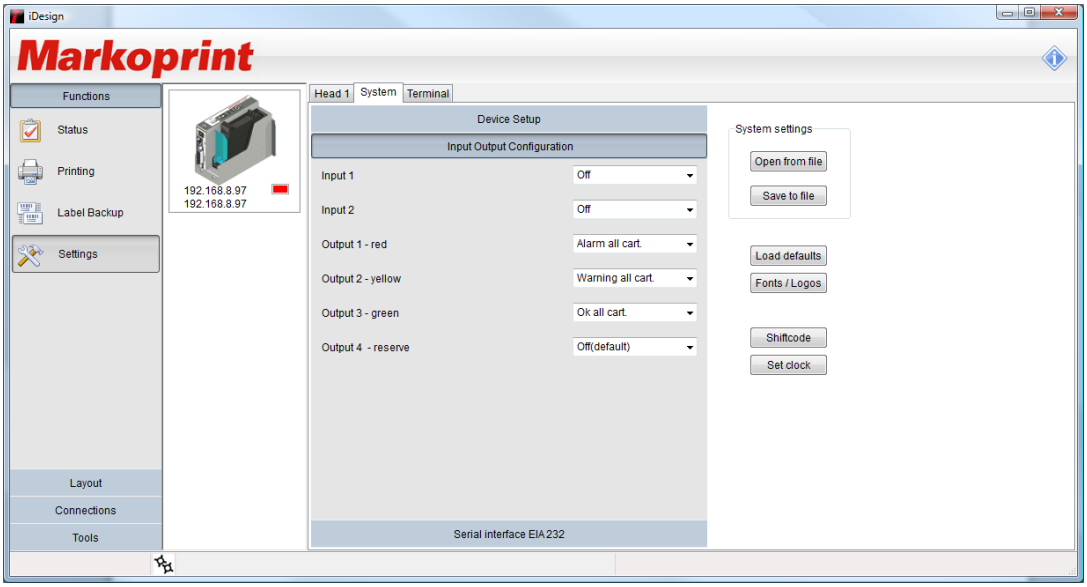

Fig. 7-18: User interface Software iDesign

Settings by iDesign software

Following print parameter can set up with the iDesign software (Note the instructions of the provided iDesign software manual):

- Print start delay
- Print direction
- Overhead
- Zoom

- Fixed speed
- Speed (Only adjustable if fixed speed is adjusted)
- Intensity (Only adjustable if fixed speed is adjusted)

- Shaft encoder
- Shaft encoder resolution (only adjustable if shaft encoder is adjusted)
- Shaft encoder divider (only adjustable if shaft encoder is adjusted)

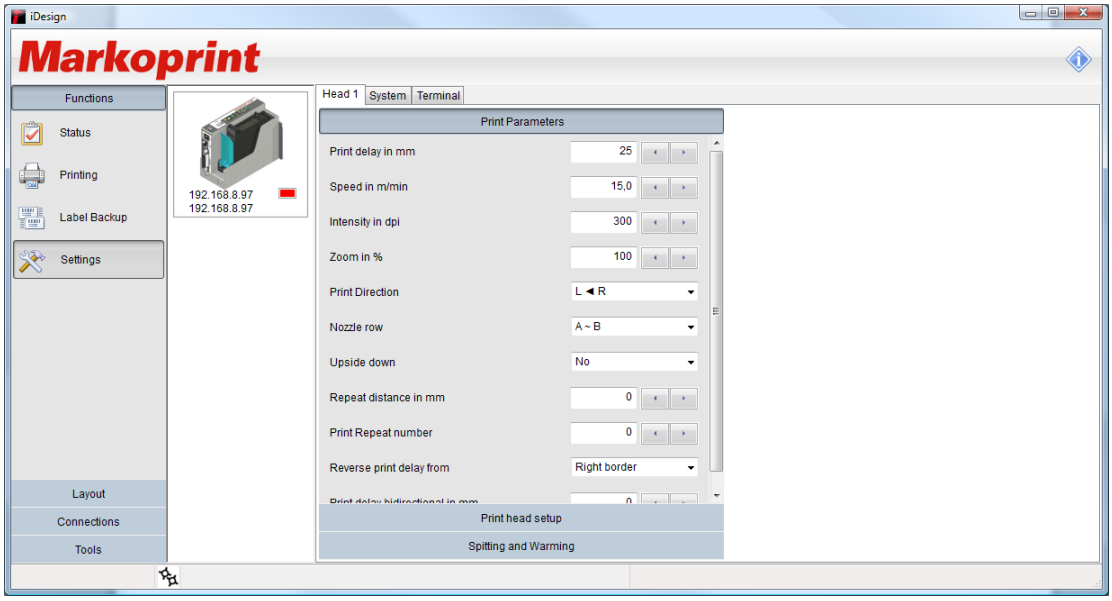

Fig. 7-18: Set print parameter by iDesign

8. iDesign

Create a print image

No print images can be created on the X1JET HP system unit itself.
Print images can be created and processed with the iDesign software stored on the USB stick. For this purpose, this must be installed on a commercially available PC (follow the enclosed iDesign operating instructions).

The diagram below shows the operating surface of the iDesign software

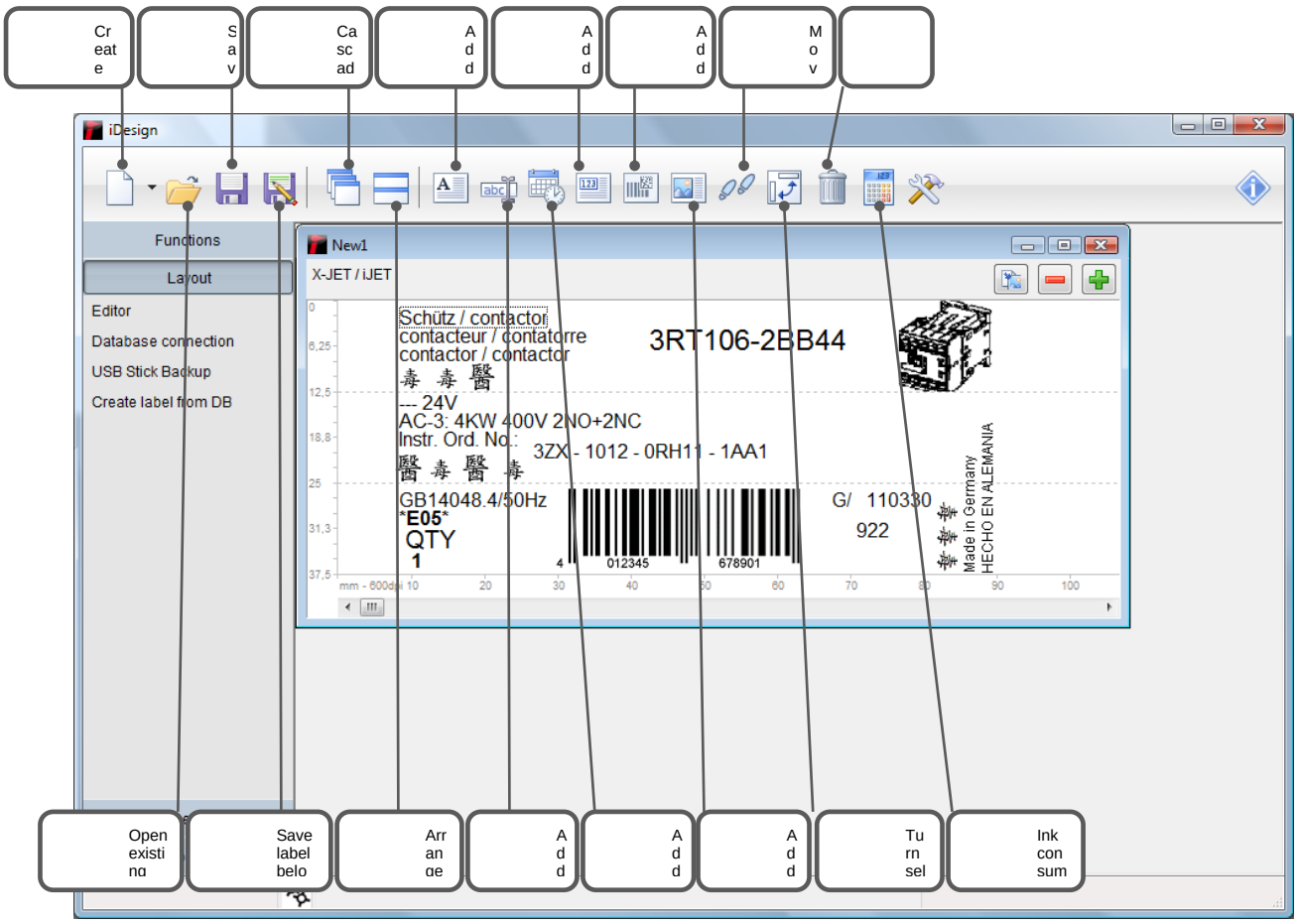

Fig. 8-1: User interface Editor iDesign Software

Ethernet Connection establishing

To establish an Ethernet connection to the printer you have to know a free Ethernet address.
Please ask your system administrator.

Instruction

How to set the Ethernet address in the system:

Step	Procedure
1	Connect a USB stick to the X1JET and wait that the status LED stops blinking.
2	Connect the USB stick to a PC with iDesign software. The system will be shown in iDesign.
3	Click in iDesign with the mouse on the system icon and enter the requested IP address under Functions / Settings / System / IP address. Confirm the IP address and add the connection to iDesign.
4	Now connect the USB stick again to the X1JET. The X1JET should now be visible under the desired IP address.

9. Faults

The following chapter describes possible causes of malfunctions and how to remedy these.
In case of frequent faults, reduce the service intervals depending on the actual work load.

Please contact your local distributor with regard to faults that cannot be remedied with the information provided below.

Safety

Staff

- The fault remediation work described here, unless specified otherwise, can be performed by the operator.
- Some tasks may only be performed by specially trained specialized staff or exclusively by the manufacturer; this is specifically pointed out in the description of the individual faults.
- Work on the electrical system may only be performed by electricians.

WARNING **Danger to life through electric shock!**

DANGER TO LIFE!

Contact with live parts poses imminent danger to life. Damaged insulation or individual components can be lethal.

Therefore:

– Immediately switch off the power supply and initiate repairs if the insulation is damaged.
– Work on the electrical system may only be performed by electricians.
– Before working on the electrical system, disconnect from the mains (remove mains plug) and check that power is off.
– Always disconnect mains before performing cleaning and repair tasks.
– Keep moisture from live parts. Moisture may cause a short-circuit.

CAUTION

Risk of injury by improper fault remediation!

WARNING!

Improper fault remediation may cause severe injury to persons, or material damage.

Therefore:

– Ensure adequate working space before starting any work.
– Keep the working area clean and tidy! Loosely stacked or scattered components and tools are potential causes of accidents.

Table of faults

Faults	Possible causes	Troubleshooting	Recovered by
System unit does not start	No power supply	Check power supply	Electrician
	No 12V DC	Check 12V voltage, Change power supply	Electrician Instructed Person
System unit does not produce a print image	System on Standby	Press On / Off button	Instructed Person
	Print image not assigned	Assign print image	Instructed Person
	Stop print	Start print	Instructed Person
	Missing start pulse	Check photo sensor and connection cable	Electrician
	Missing ink cartridge	Insert ink cartridge	Instructed Person
	Empty ink cartridge	Insert new ink cartridge	Instructed Person
	Defect ink cartridge	Insert new ink cartridge	Instructed Person
	Dry up ink cartridge	Clean ink cartridge	Instructed Person
	Ink cartridge not inserted correctly	Remove and reinsert ink cartridge	Instructed Person
	Print parameter incorrect	Check print parameter, adjust if necessary	Instructed Person
	Fault in the electronics of the controller or the print head	Send controller or print head in for repairs	Manufacturer
	Faulty rotary encoder or incorrect rotary encoder settings	Check rotary encoder and encoder settings	Instructed Person
Bad and fuzzy print image	The distance between print head and product is too big	Reduce distance to 0 -4 mm …5 mm	Qualified person
	Low intensity	Increase intensity	Instructed Person
	Empty ink cartridge	Change ink cartridge	Instructed Person
	Blocked nozzles	Spitting and wipe the nozzle plate if necessary.	Instructed Person

Trouble shooting tasks

Cleaning the ink cartridge

NOTICE

Material damage due to incorrect cleaning!

Incorrect cleaning may scratch the nozzles of the ink cartridges, causing blurred print images since the scratches around the nozzles divert the ink.

Therefore:

– Use only lint-free and absorbent cloths to clean the cartridges.
– Moisten cleaning cloths with water.
– Wipe slowly without pressure.

- To be done by instructed person.
- To be done if print quality deteriorates during printing or after extended period of non-use.

During printing the print quality may deteriorate due to dust and ink vapor. In this case, wipe the nozzle plate of the ink cartridge with a moist, lint-free cloth. The water in the moist cloth dissolves the ink residues and cleans the nozzles and the ink channels.

Needed tools

- Absorbent cloth

Instruction

Please clean the nozzle plate as follows:

Step	Procedure
1	Remove the ink cartridge from the holder. → ***Chapter*** Removing Ink Cartridge***, Page*** 52
2	Hold the ink cartridge with the nozzle plate facing downward.
3	Slowly wipe across the nozzle plate in the direction of the arrow, using a moistened and lint-free cloth. Do not shake the ink cartridge!

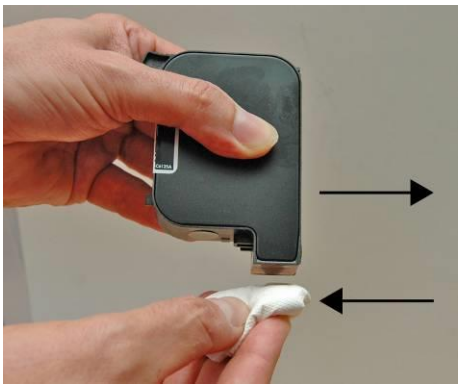

Fig. 9-1: Cleaning the nozzle plate

4	Reinsert the ink cartridge in the holder. → ***Chapter*** Inserting Ink Cartridge***, Page*** 49

A small amount of water may mix with the ink in the channels, rendering the first print a bit grey.

Rinsing and de-aerate the ink cartridge with the ink activator

NOTICE

Material damage due to ink leavings!

Please secure the environment against ink leavings by removing the cartridge or take off the injection.

Therefore:

– Absorb the excess ink with an absorbent cloth.

- Applied by instructed person.
- Apply if, even after wiping the nozzle plate, the print quality does not improve.

Ink cartridges exposed for an extended period may dry up to such an extent that simple cleaning by wiping is inadequate.
Open ink cartridges subjected to severe shock or shaking may result in air entering the nozzles. These results in increased nozzle failures during printing or the ink cartridges stop printing altogether.
In this case, the cartridge nozzles can be rinsed with the ink activator. The ink activator consists of a holder and an injection.

Needed tools

- Ink-Activator
- Injection

Instruction

Please de-aerate the ink cartridge as follows:

Step	Procedure
1	Insert the ink cartridge in the ink activator holder as shown in the figure.
2	Press the ink cartridge in the direction of the arrow until the cartridge is firmly seated in the holder.

Fig. 9-2: Inserting ink cartridge in den Ink-Activator

3	Insert the injection in the opening of the holder.

Step	Procedure

Fig. 9-3: Extracting ink

4	Slowly and steadily extract approx. 1 to 2 ml of ink from the cartridge. In case of foam formation in the injection, continue extraction until the ink appears in the injection.
5	Remove the syringe from the holder.
6	Remove the ink cartridge from the holder.
7	Wipe the nozzle plate of the ink cartridge. → ***Chapter*** Cleaning the ink cartridge***, Page*** 78
8	Check if ink is flowing out of the nozzles.
9	If no ink is flowing, re-use the cartridge.

Air in the cartridge

Air in the cartridge makes noticeable loss nozzles. This covers an ever wider area. Air into the nozzle can occur if the cartridges be left open for long, especially when MIBL2, as these contain alcohol. Or when a cartridge is dropped, severely shaken, or is exposed to strong vibrations. To remove the air from the nozzles, the ink activator can be used as described in the manual. A typical failure screen looks like this:

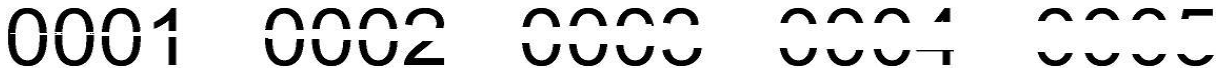

Fig. 9-4: Example of a print image with loss of nozzles

10. Disassembly

When end of the useful life expires, the system must be disassembled and disposed in an environmentally-friendly manner.

Safety

Staff

WARNING **Danger to life through electric shock!**

DANGER TO LIFE!

Contact with live parts poses imminent danger to life. Damaged insulation or individual components can be lethal.

Therefore:

- Immediately switch off the power supply and initiate repairs if the insulation is damaged.
- Work on the electrical system may only be performed by electricians.
- Before working on the electrical system, disconnect from the mains (remove mains plug) and check that power is off.
- Always disconnect mains before performing cleaning and repair tasks.
- Keep moisture from live parts. Moisture may cause a short-circuit.

CAUTION **Risk of injury caused by improper disassembly!**

WARNING!

Stored residual energy, sharp-edged components, points and corners on and inside the apparatus or on the required tools may cause injuries.

Therefore:

- Ensure adequate space before starting any work.
- Handle exposed sharp-edged components with care.
- Keep the work area clean and tidy! Loosely stacked or scattered components and tools are potential causes of accidents.
- Secure components to prevent falling down or falling over.
- Consult the manufacturer if uncertain.

- Disassembly may only be performed by specially trained specialised staff.
- Work on the electrical system may only be performed by electricians

Disposal

NOTICE

Environmental damage due to incorrect disposal!

Electrical scrap, electronic components, lubricants and other auxiliary materials are subject to hazardous waste treatment regulations and may only be disposed of by approved specialized companies!

Unless return or disposal agreements were made, submit disassembled components for recycling:

- Scrap metals.
- Submit plastic components for recycling.
- Dispose of other components according to material composition.

The local municipal authorities or specialized disposal companies provide information on environmentally compatible disposal.

11. List of Accessories and Spare parts

NOTICE

Safety hazard due to incorrect spare parts!

Incorrect or faulty spare parts may affect safety and cause damage, malfunctions or failure.

Therefore:

– Only use original spare parts from the manufacturer.

Procure spare parts via contracted dealers or directly from the manufacturer.

Ink cartridges

NOTICE

Material damage can be caused by spraying ink!

Spitting results in increased ink consumption and can lead to undesirable contamination of the environment.

Therefore:

– Hold an absorbent cloth in front of the nozzle plate of the ink cartridge.

The specified drying times can be reduced by additional heat treatment (hot-air blower, IR heater). The open time can be extended by spit pulse programming.

Please note the ink specific settings for head voltage, fire time, spitting and warming. There is the possibility to set up the ideally standard values for the respective ink type on the iDesign software or Web interface.
It makes sense to change the values carefully depending on the application.

After the insertion of a new cartridge the ink counter must be reset.
Ink level: → ***Chapter*** Reset ink counter**, *Page*** 63

The settings can be made with the iDesign software below **Functions / System settings / Advanced settings**.

Pos.	Name	Description	Art.no
1	HP-Set 4 STABL	2 x ink cartridges, color black, volume per cartridge 42 ml. Specially developed, highly pigmented HP ink. Well suited for sharp edged print on absorbent materials. **Drying:** Good on absorbent surfaces; ink does not dry on poorly absorbent surfaces since the pigments remain on the surface. **Open time without loss of quality:** Approx. 15 minutes (depending on print resolution and print image).	72500013
2	HP Set 12 UVINV	2x print cartridges, colour transparent, volume each 42 ml. Specially developed HP ink, readable under UV light. Well suited for sharp edged print on poorly absorbent materials.	72500021
3	HP Set 14 MIBL 2	2x print cartridges, colour black, volume each 42 ml. Specially developed, solvent-containing, pigmented HP ink. Well suited for sharp edged print on lacquered materials.	72500023
4	HP Set 26 RCBLU	2x print cartridges, colour blue, content per 42 ml. Specially developed, solvent-containing HP ink. Well suited for printing on poorly absorbent material. **Drying:** On poorly absorbent surfaces within a few seconds, on absorbent surfaces immediately. Good marginal sharpness on poorly absorbent surfaces. **Open time without loss of quality:** Up to 2 hours (depending on intensity and print image).	72500036
5	HP Set 27 RCRD	2x print cartridges, colour red, content per 42 ml. Specially developed, solvent-containing HP ink. Well suited for printing on poorly absorbent material.	72500037
6	Cartridge HP WDGN1	1x print cartridge, colour green, content per 42 ml. Specially developed, solvent-containing HP ink. Well suited for printing on poorly absorbent material.	40013323
7	Cartridge HP Ultra Black	1x print cartridge, colour black, content per 42 ml. Specially developed, non-pigmented dye-based ink. Well suited for pin sharp prints on absorbent and semi-absorbent materials. Delivered as SmartCard cartridge.	40018776
8	Cartridge HP 2580	1x print cartridge, colour black, content per 35 ml. Specially developed, dye-based ink (solvent based). Good adhesion qualities on different non-absorbent surfaces. Long open time (approx. 900 minutes) Delivered as SmartCard cartridge.	40012279
9	Cartridge HP SDBLK3	1x print cartridge, colour black, content per 35 ml. Specially developed, dye-based ink (solvent based). High blackness, abrasion-resistant on some non-absorbent surfaces. Delivered as SmartCard cartridge.	40017072
10	Cartridge HP WDBLK1	1x print cartridge, colour black, content per 42 ml. Specially developed, non-pigmented dye-based ink. Well suited for printing on absorbent and semi-absorbent surfaces. Delivered as SmartCard cartridge.	40010705

Pos.	Name	Description	Art.no
11	Cartridge HP WDBLK2	1x print cartridge, colour black, content per 42 ml. Specially developed, non-pigmented dye-based ink. Well suited for printing on absorbent and semi-absorbent surfaces. Open time: up to 4 hours without loss of quality. Delivered as SmartCard cartridge.	40016702
12	HP Pack STABL	10x print cartridges, colour black, content per 42 ml. Specially developed, solvent-containing HP ink. Well suited for printing on poorly absorbent material. Delivered as SmartCard cartridge.	72500139

Spitting and Warming

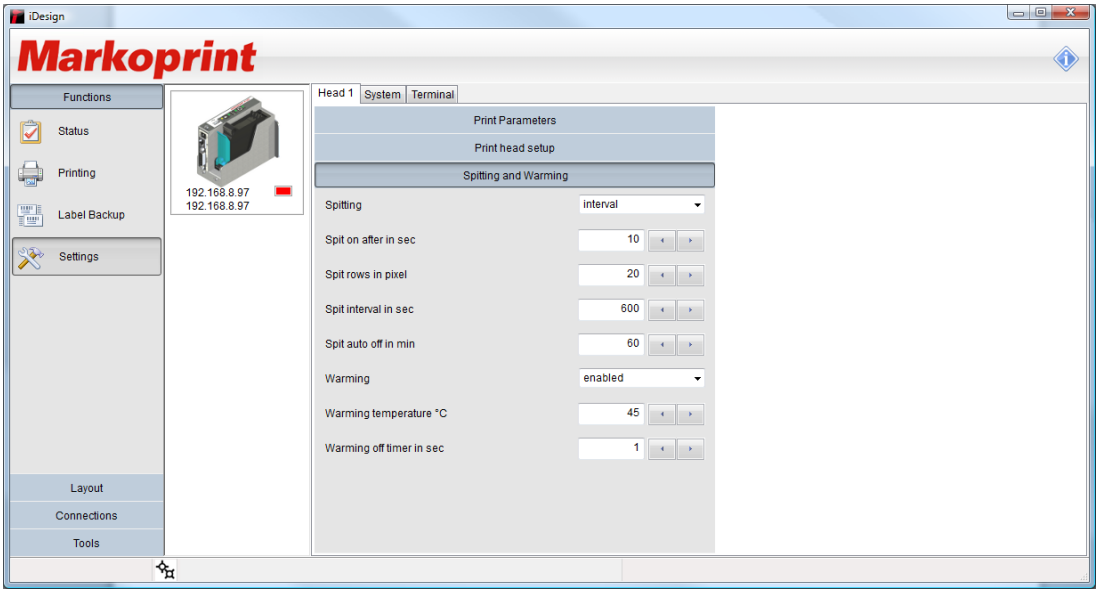

Fig. 11-1: iDesign Advanced settings

Mounting brackets

Pos.	Article	Description	Order no.
1	Mounting bracket System unit ***X1JET HP***	for a fixing on a conveyor from the side, with quick fastener to take the system unit out of the mounting bracket without technical tools. Model „Dovetail“	72801043
2	Mounting bracket System unit ***X1JET HP*** TOP	for a fixing on a conveyor from the top, with quick fastener to take the system unit out of the mounting bracket without technical tools. Model „Dovetail“	72801045
3	Flexbracket Kit X1 JET HP	flexible bracket to compensate variable distances between control system and product. Maximum travel length 20mm; maximum print speed 30 m/min.	72900584

Other

Pos.	Figure	Assembly	Description	Order no.
1		Power supply	Power supply X1JET	72900535
2		Mounting bracket	Universal Mounting bracket	72801043
3		Mounting bracket Top	Universal Mounting bracket Top	72801045
4	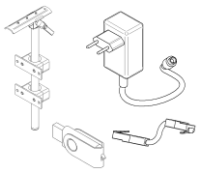	X1JET Accessories set	consisting of: -Power supply -Universal mounting bracket -USB-stick -Network cable	72801044
5		Light barrier NPN, 10…30V DC Standard M8	including 5.0 m connecting cable and universal holder	72800002
6		Shaft encoder ***X1JET HP*** Spring arm holder	Push-pull output, 5,000 pulses/rev, with spring arm and friction wheel optimized to 600 dpi, including mounting holder and connecting cable M12 Splitter cable necessary	72801042
7		Rotary encoder ***X1JET HP*** Angle holder	Push-pull output, 5,000 pulses/rev., with angle holder, friction wheel and connecting cable M12 Splitter cable necessary	72801041

Pos.	Figure	Assembly	Description	Order no.
8	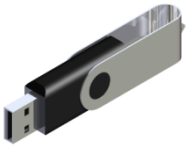	***X1JET*** USB-data stick	Version 1	72901203
9		CartClip	for retaining ink cartridges type 15/45	72900074
10		Ink-Activator	for de-aerating and cleaning the ink cartridges	72900108
11		Measuring wheel	Measuring wheel with O-ring for shaft encoder, optimized for 600 dpi	72900454
12		O-Ring	O-Ring for encoder measuring wheel (600 dpi) Dimensions: 55x5; NBR	72900455
13		Splitter cable	Splitter cable for the connection of more than 2 options, alarm, RS232, sensor, encoder	72900545
14		Ethernet patch cable 2m	Ethernet patch cable CAT6 - 2m	4009872
15		Ethernet patch cable 5m	Ethernet patch cable CAT6 - 5m	22801341
16		Alarm box	Alarmbox for connecting an alarmlight 3 color M12	72801072
17		Alarm light	Alarmlight 3 color M12	22702287
18		Flexbracket kit X1JET HP	consisting of: -Flex bracket deflector -Flex bracket -Screws	72900584

12. Appendix

Ink chart

The X1JET HP has a deposit ink chart. The optimal parameter of an ink will be automatically adopted by the ink selection.
If the parameters were changed in the iDesign software, the changed parameters stay active till a new ink type will be select on the X1JET HP.
The ink tables are stored as excel tables in the HMI account: „InkPar.csv“.
The chart can be adapted customized with an HMI update →***Chapter*** Software-Update***, Page*** 91 and can load to the memory of the X1JET HP.

Changes of the ink parameter can cause bad print images and should conduct from specialized staff.

SET Nr.	Bezeichnung	S-Nr	Inhalt	Spannung	Fire Time	Spitting	Spit Rows	Spit Delay	Warming	Warm Temp	Warm time	Sub Fire	Spit Intervall	Auto Off	Order No	Correction
1	STABL	4	100	110	190	Off	0	0	No	20	0	190	0	0	B3F57A	
2	DIBL	5	100	110	190	Off	0	0	No	20	0	190	0	0		
3	MIBL2	14	129	105	190	Off	0	0	No	20	0	190	0	0		
4	SCRD	8	100	110	190	Off	0	0	No	20	0	190	0	0		
5	SCGN	9	100	110	190	Off	0	0	No	20	0	190	0	0		
6	SCBLU	10	100	110	190	Off	0	0	No	20	0	190	0	0		
7	WEBL	11	100	110	190	Off	0	0	No	20	0	190	0	0		
8	UVC1	28	100	110	190	Off	0	0	No	20	0	190	0	0		
9	BEABL	30	100	80	240	before	25	5	Yes	45	1	190	0	0		
10	UVINV	12	100	110	190	Off	0	0	No	20	0	190	0	0		
11	IRINV	13	100	110	190	Off	0	0	No	20	0	190	0	0		
12	G1BL	15	100	110	190	Off	0	0	No	20	0	190	0	0		
13	CMBLK	25	100	110	190	Off	0	0	No	20	0	190	0	0		
14	RCBLU	26	100	110	190	Off	0	0	No	20	0	190	0	0		
15	RCRD	27	100	110	190	Off	0	0	No	20	0	190	0	0		
16	UltraBlack	31	100	110	190	Off	0	0	No	20	0	190	0	0		
17	FastSolid	33	100	80	240	before	25	60	Yes	45	1	190	0	0		
18	CMBLK2	34	100	110	190	Off	0	0	No	20	0	190	0	0		
19	NPBLK	35	100	80	240	before	25	60	Yes	45	1	190	0	0		
20	Bulk400	99	952	110	190	Off	0	0	No	20	0	190	0	0		
21	FSBLK	36	100	80	240	before	25	60	Yes	45	1	190	0	0		
22	PTBLK	37	75	87	180	Off	0	0	No	20	0	190	0	0		
23	HP 2580	38	75	87	180	Off	0	0	No	20	0	190	0	0	B3F58A	
24	WDBLK1	39	100	110	190	Off	0	0	No	20	0	190	0	0		
25	WDBLK2	40	100	110	190	Off	0	0	No	20	0	190	0	0	40016702	
26	SDBLK1	41	75	110	230	Off	0	0	No	20	0	190	0	0		
27	SDBLK2	42	75	86	180	Off	0	0	No	20	0	190	0	0	REORDER PN	
28	SDBLK3	43	75	86	230	Off	0	0	No	20	0	190	0	0	40017072	

Software-Update

Software-update with USB-Stick

Requirements

- The program directories „HMI“, „Html“ and „SYSTEM“ are copied in the main directory of an empty USB-stick.
- The Markoprint X1JET HP/ -Premium is not connected to the power supply.

Instruction

Please proceed the software-update as follows:

Step	Procedure
1	Connect the Markoprint X1JET HP/ -Premium with the power supply and press the [Ink]-button simultaneously and press it as long as the Sensor LED flashes green/red.
2	Connect the USB-stick in the USB socket on the top side of the system.
3	The Sensor LED flashes yellow/red if the program is load.
4	Confirm by pressing the start-button and wait until the system is restart.
5	Remove now the USB-stick.

Software-Upgrade

A software upgrade with costs is comfortably possible via the Weber Marking Partner Portal.
Please contact your consultant or local distributor to get a software-upgrade.
You can find a detailed instruction of the software upgrade below the search key „Configuration upgrade“ in the Wiki of the Weber Marking Partner Portal.

USB-Stick files

Following files are saved on the USB-stick:

- iDesign-Software
- Manual X1JET HP
- Manual iDesign Software
- Leaflet

The required files for software updates:

- HMI-directory
- HTML-directory
- System-directory

Directory structure:

Markoprint	*L12003-x1*	Status.ast	
	L12004-x1	Status.ast	
		Command.ast	
		Result.ast	
		Log.txt	
		Label	1.00I
			2.00I
		Fonts	A4mm.ft3
			A6mm.ft3
		Logos	Cow.bmp
			HP.bmp

- Global.ast	Is only executed if no Command.ast exists for the system.
- Result.ast	Result of Global.ast

The 9 print images which can call up with the keys: 1.00I to 9.00I.

Boot-LED messages

During booting of the system progress can be determined by means of the LED.
If the system stops during booting the cause can be determined by means of the LED.
FC means flashing. An error can be determined on the basis of the number of flashes.

Status-LED ⚠	Sensor-LED ⎍	Description
ye	ye	Boot BF-Intern
rd	—	Write 64MB memory
—	rd	Read/invert 64MB memory
ye	—	Read/test 64MB memory
—	ye	Test ok / Load BootMain from SPI
ye	rd	Programming and start of BootMain
—	—	BootMain initialization
rd	rd	Fatal error
rd	FC: rd	Boot-error 4x = SPI; 5x = GA; 6x = Displ; 7x = SD-Card; 8x = USB; 9x = RTC; 10x = Task
rd	FC: gn	Init-error 1x = Dev; 2x = FS; 3x= UsrCl
ge	gn	Read SD-Card
ye	rd / gn	Wait for Stick
ye	rd / —	No boot data
ye	ye / gn	Booting of stick?
ye	ye / rd	Copying of stick?
ye	gn / —	Copy Ok
gn	—	Main program loaded and started

HP MK2 LED Meldungen

Beim Einsetzen einer Kartusche kann anhand der LED's die SmartCard Funktion überprüft werden.

Status-LED ⚠		Beschreibung
FC: gn		HP SmartCard Kartusche
FC: rt		Keine SmartCard Kartusche, Druck gesperrt
FC: rt / gn		Keine SmartCard Kartusche, Druck freigegeben
FC: ge / rt		HP SmartCard Kartusche, Chipfehler, Druck gesperrt

Plug connections

Voltage input

Operating voltage: 12V direct current, min 1,25A
Connector: phone jack 2,1 / 5,5mm

PIN	Description	Value	Unit
inside	Power min 1250 mA	+ 12	V
outside	GND	0	V

Ethernet

Connection
Network input RJ 45 on the back side of the system.

PIN	Description
1	Transmit+
2	Transmit-
3	Receive+
6	Receive-

USB A

The USB sockets are standard sockets, as used in commercial PCs and USB devices. Insert the USB-stick without force effect normal to the top side of the system in the USB socket.

PIN	Name	Color	Description
1	VCC	Red	+5 V
2	D-	White	Data -
3	D+	Green	Data +
4	GND	Black	Mass

Option

Option socket: 15 pol Sub-D connector

PIN	Description	Value	Unit
1	GND	0	V
2	Output 1 (OK)	Open Collector, max 24V / 100mA	
3	Input 1	Input Standard: NPN	
4	Input 2	Input Standard: NPN	
5	Output 3	Open Collector, max 24V / 100mA	
6	Output 4	Open Collector, max 24V / 100mA	
7	EIA 232	TXD	
8	GND	0	V
9	Output 2 (Error)	Open Collector, max 24V / 100mA	
10	Start pulse	Input Standard: NPN	
11	Shaft encoder	Input Standard: NPN	
12	Not used		
13	Not used		
14	EIA 232	RXD	
15	Power	+12	V

Splitter cable (72900545)

Pin-configuration:

15 pole Sub-D-connector	9pole Sub-D-connector (EIA232)
PIN 7	PIN 3
PIN 14	PIN 2
PIN 8	PIN 5

15 pole Sub-D-connector	4pole M12 socket (Encoder)
PIN 8	PIN 3
PIN 11	PIN 4
PIN 15	PIN 1

15 pole Sub-D-connector	4pole M12 socket (Sensor)
PIN 8	PIN 3
PIN 10	PIN 4
PIN 15	PIN 1

15 pole Sub-D-connector	15 pole Sub-D socket (Alarm I/O)
PIN 1	PIN 1
PIN 2	PIN 2
PIN 3	PIN 3
PIN 4	PIN 4
PIN 5	PIN 5
PIN 6	PIN 6
PIN 8	PIN 8
PIN 9	PIN 9
PIN 10	PIN 10
PIN 11	PIN 11
PIN 15	PIN 15

Sensors

Sensor input:
Standard: NPN (switching to GND)
Voltage: 12V (10-30V)
Threshold level: 7V

If switching the input to PNP a resistor of 2kOhm must be connected between input (Pin10) and ground (Pin1)

Encoder

Encoder input:
Standard: Push-pull or NPN (switching to GND)
Voltage: 12V (10-30V)
Threshold level: 7V
Frequency: Max. 150 kHz

If more systems should be connected together the sensor and encoder signal can be connected parallel. Max. 5 systems because of the power used.

alternativ for up to 8 heads the connection box art.no. 40006827 can be used.

The +12V power should be only connected between one system and sensor / encoder not between the systems !

15 pol Sub-D-female	15 pol Sub-D-male	15 pol Sub-D-male	Up To 5 Systems	15 pol Sub-D-male	15 pol Sub-D-female
PIN 1 – GND	PIN 1	PIN 1	PIN 1	PIN 1	PIN 1
PIN 8 – GND	PIN 8	PIN 8	PIN 8	PIN 8	PIN 8
PIN 10 – Sensor	PIN 10	PIN 10	PIN 10	PIN 10	PIN 10
PIN 11 – Encoder	PIN 11	PIN 11	PIN 11	PIN 11	PIN 11
PIN 15 – +12V	PIN 15	Not connected	Not connected	PIN 15	PIN 15

In and Output internal:

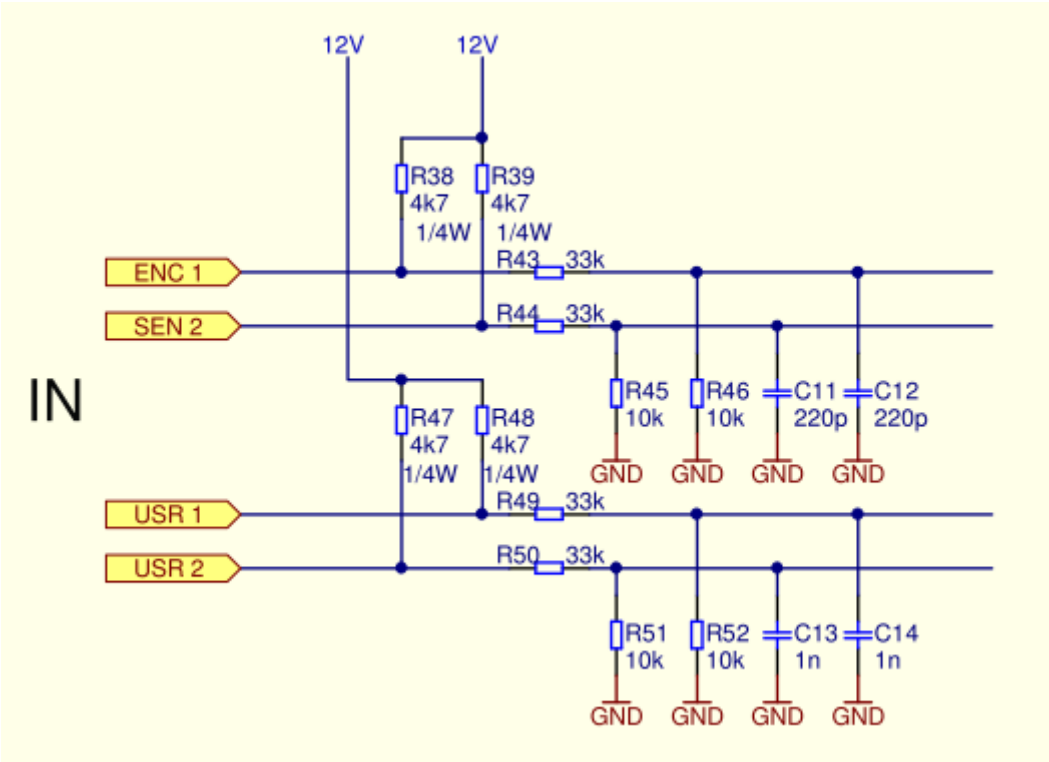

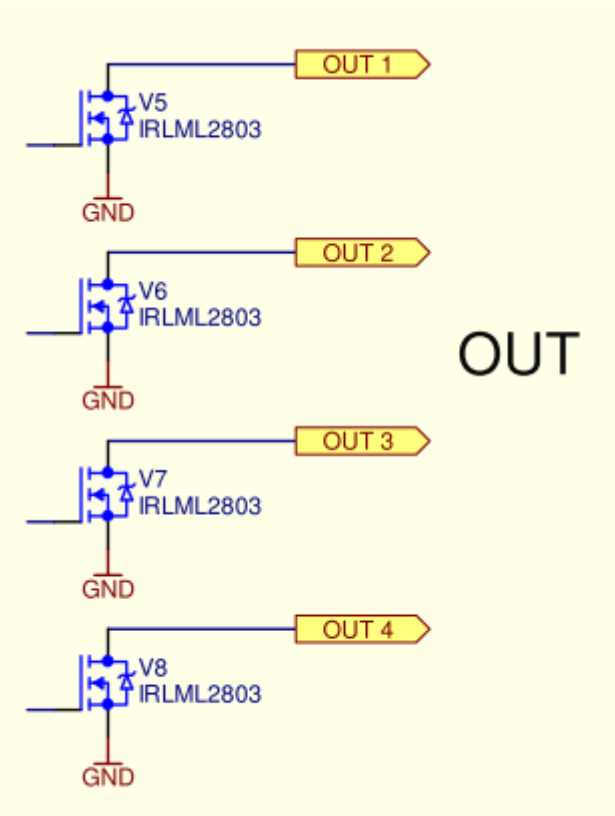

Mac address

The MAC address of the respective Markoprint X1JET HP/ -Premium can be seen on the name plate of the system. In addition, the Mac address can be seen in the iDesign software.

Instruction

Please see the MAC address by the iDesign software as follows:

Step	Procedure
1	Select the menu Functions on the left side of the iDesign software.
2	If several print systems are connected with the iDesign software, click on the illustration of the corresponding print system which shall be selected.
3	Click on the button [Status].
4	Click on the menu slide „Configuration“ to call up the corresponding menu.
5	The MAC address can be seen in the corresponding line.

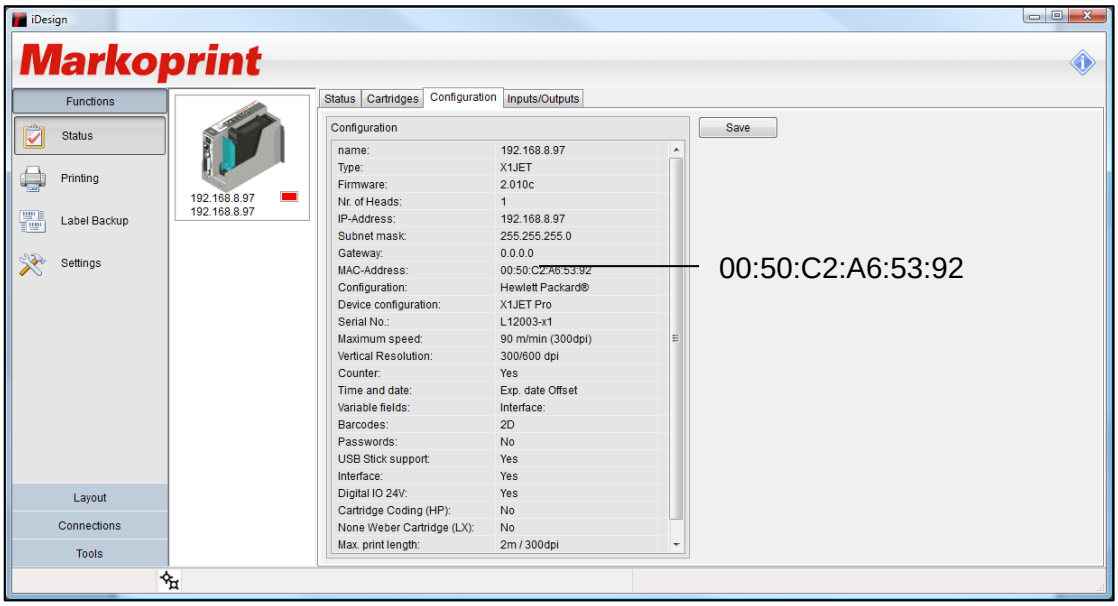

Fig. 12-1: iDesign System Config

Range from:	To:
00:50:C2:A6:50:00	00:50:C2:A6:5F:FF

Technical drawings

System unit X1JET HP

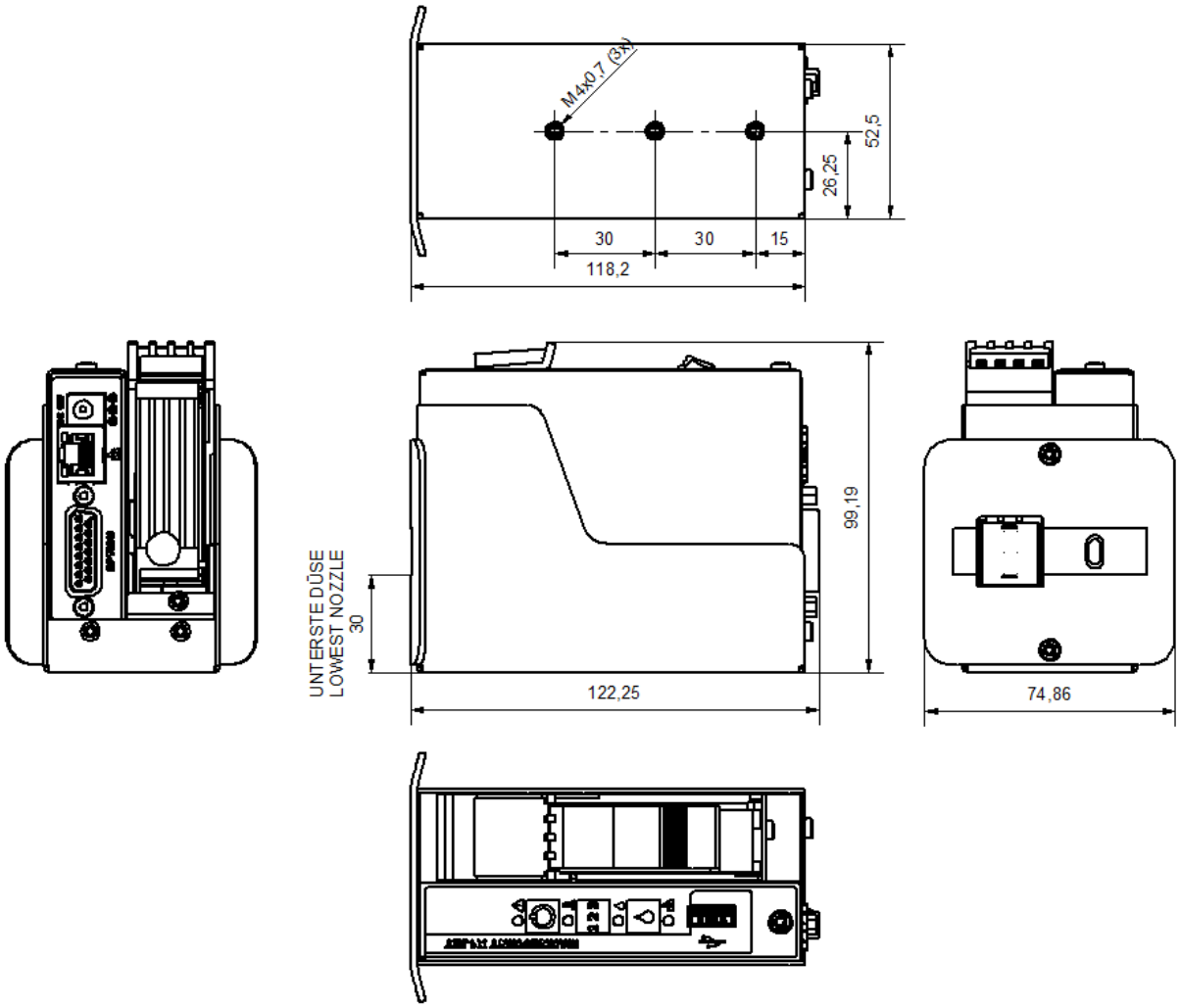

System unit with mounting bracket

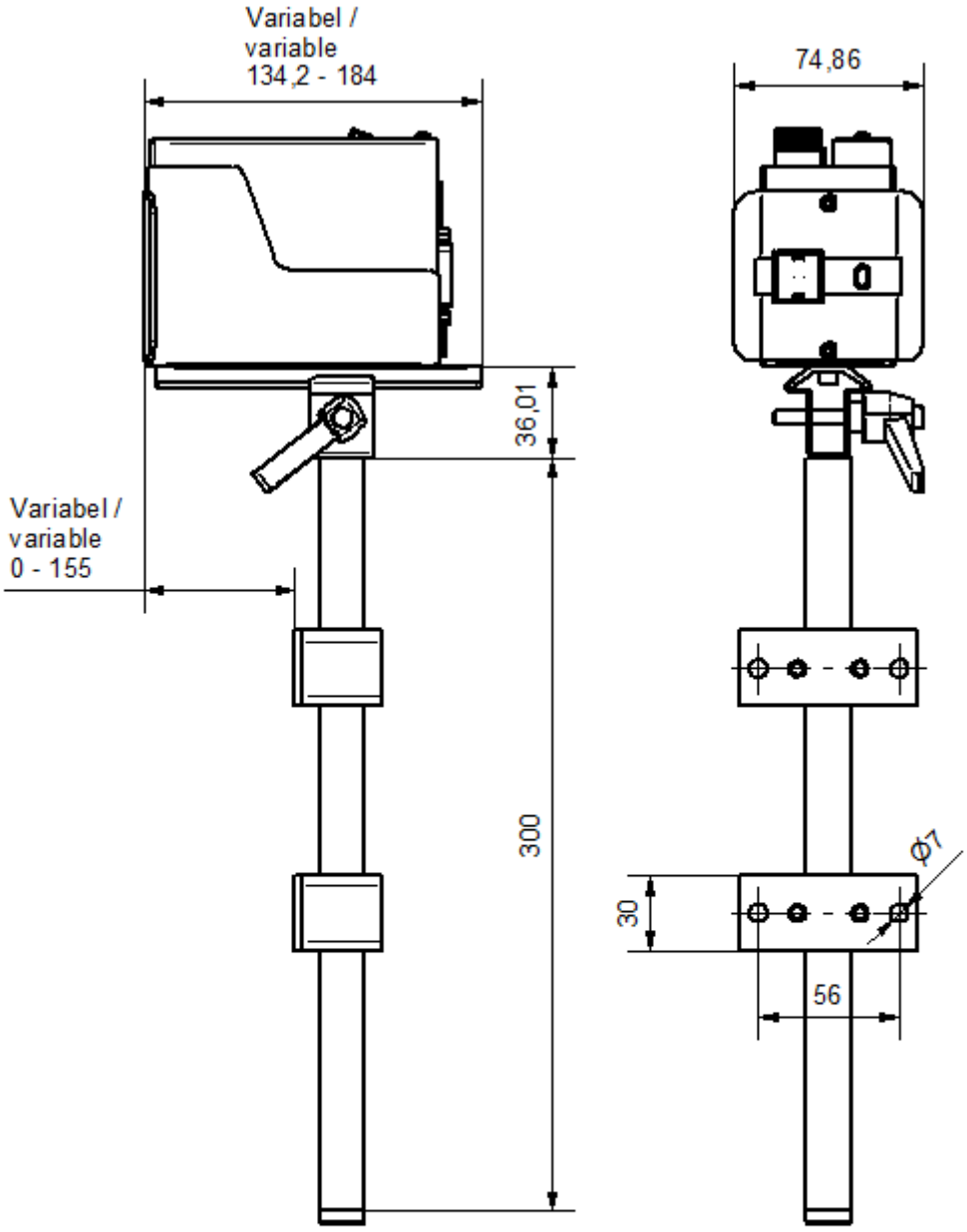

System unit with Flexbracket and mounting bracket

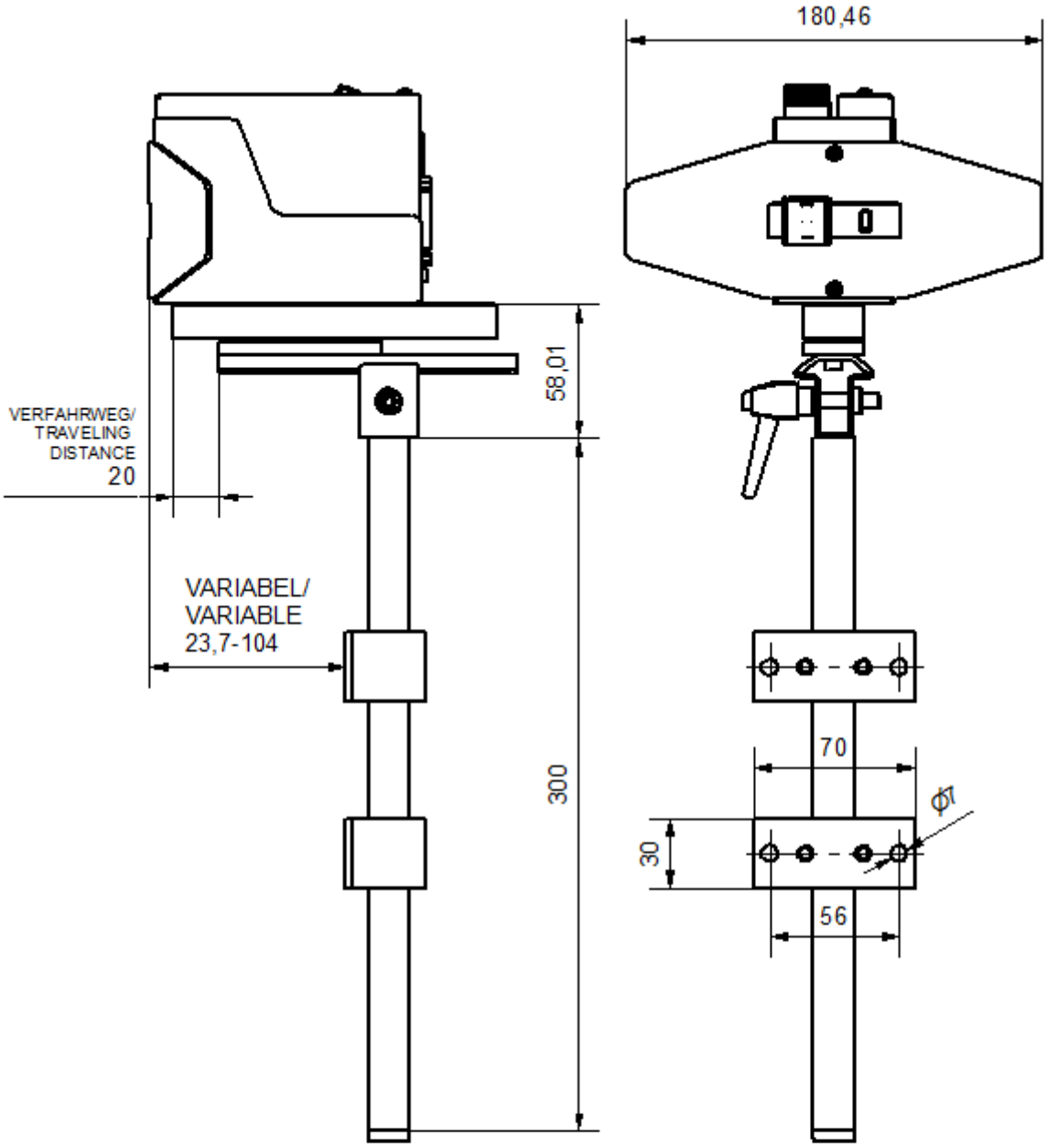

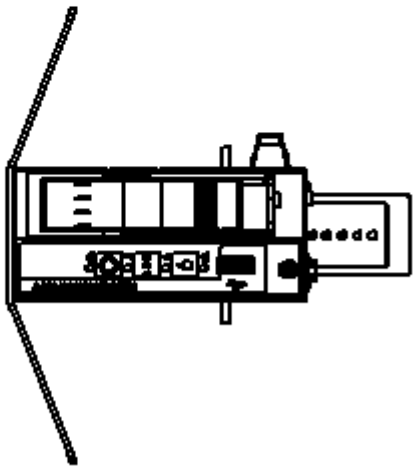

System unit X1JET HP Premium

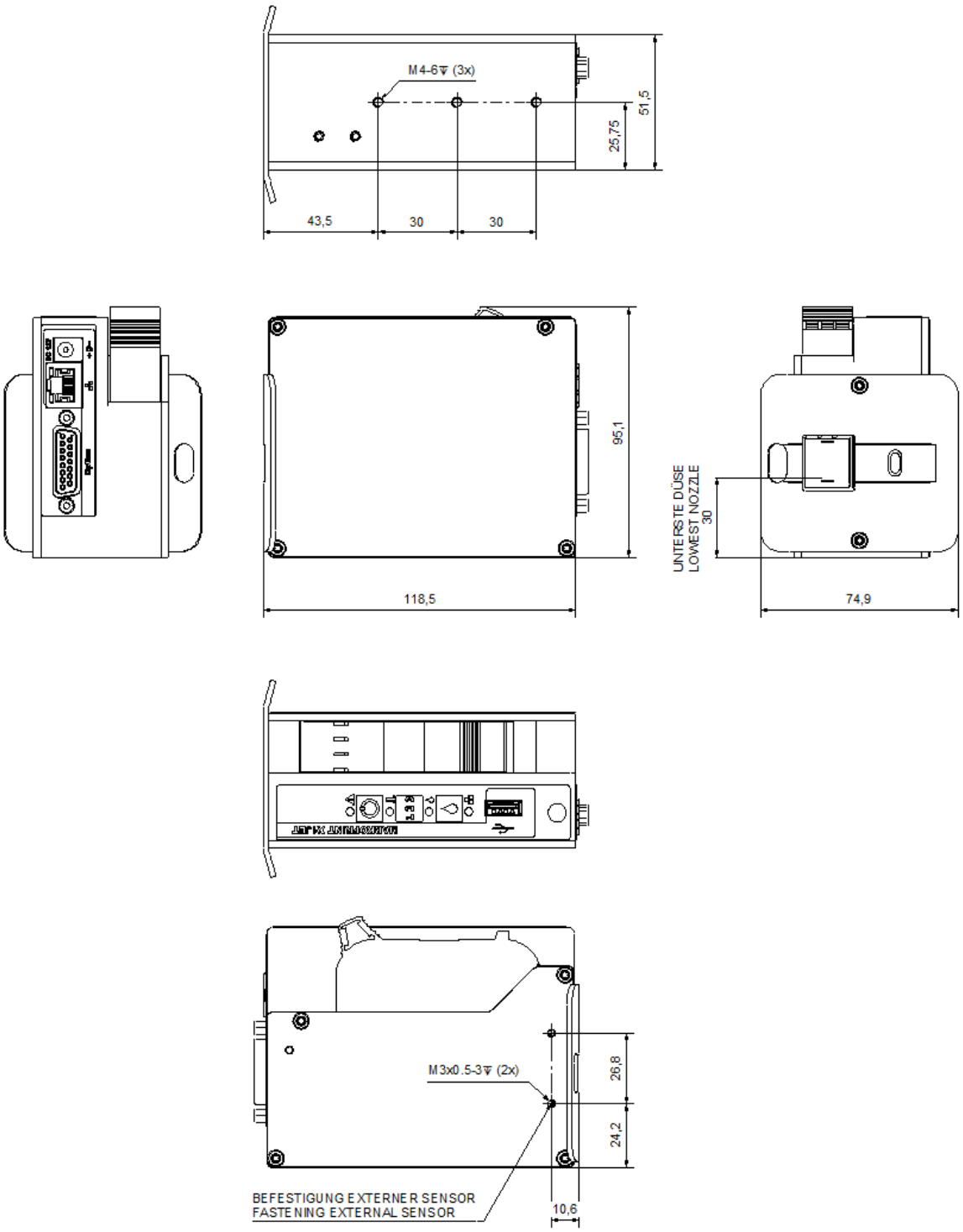

Operation of the ink cartridges

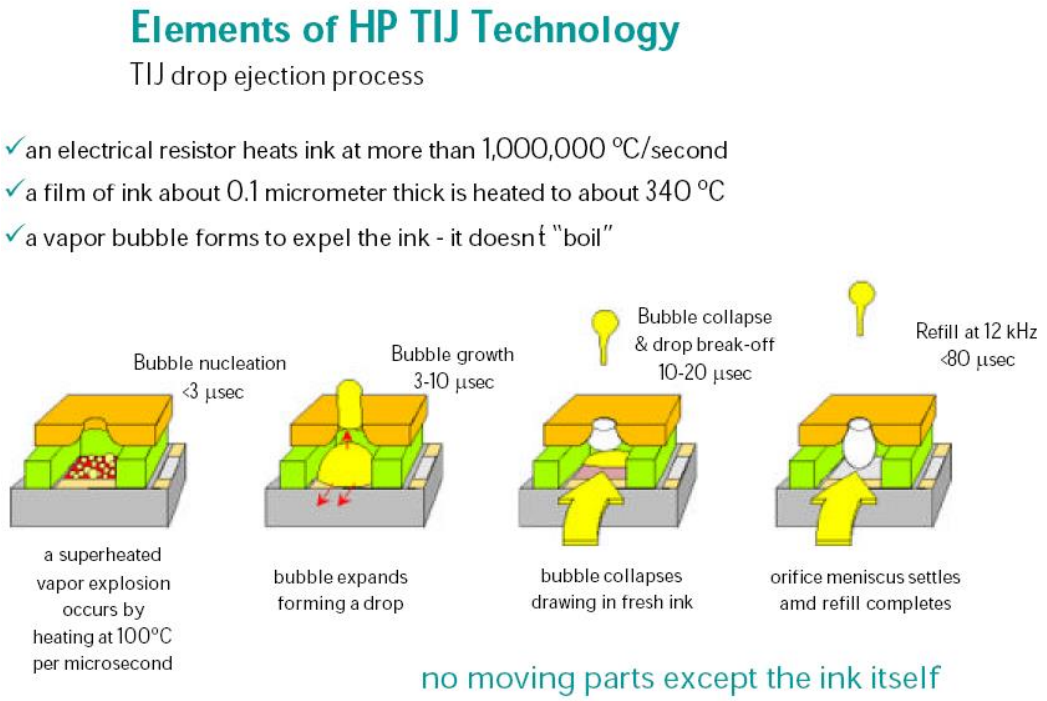

Fig. 12-2: Operation of the ink cartridges

Instruction sheet

Copy the instruction sheet before completing.

Date	Name	Type of instruction	Instruction by	Signature

Parameter list

Parameter	After Reset	Min.	Max.	Current value	Unit
Print start delay	10	0	999		mm
Speed	15	1,0	300,0		m/min
Divider shaft encoder	4	1	50		-
Intensity	300	50	900		dpi
Print width	100	10	900		%
Direction	R -->L	R -->L	L--> R		-
Nozzle row	A~B	A	A+B		-
Overhead	no	no	yes		-
Sensor	Internal	Internal	External		-
Encoder	Internal	Internal	External		-
IP-address		0.0.0.0	255.255.255.255		-
IP-mask	255.255.255.0	0.0.0.0	255.255.255.255		-
Gateway	0.0.0.0	0.0.0.0	255.255.255.255		-
Voltage	11,0	4,0	11,2		V
Fire time	190	50	300		s
Fire pause	190	100	300		s
Ink Min	5	0	99		%
Spitmode	Off	Before	Intervall		-
Columns	1	1	99		-
Delay	1	1	999		s
Intervall	1	1	999		s
Auto Off	0	1	999		min.
Repeat Delay	0	0	999		mm
Repeat Number	0	0	999		
Warming	No	yes	no		
Warming Temp.	20	20	80		°C
Warming off timer	0	0	999		s
Language	Englisch				-
Ink type	STABL				-
User 1	0	0	4		-

Declaration of Conformity

The Markoprint X1JET HP/ -Premium corresponds to the design and construction as well as the system version with the essential safety requirements of the Low-Voltage- and EMV-Directives including whose changes for this time period.

CE

12

EU – DEKLARATION OF CONFORMITY
according to EU Directive **2006/95/EG // 2004/108/EG**

We hereby declare that the below mentioned in their Design and construction and in the version marketed by us in the essential safety requirements of EU Directive low voltage and electromagnetic compatibility conforms.

Manufactured by:

Weber Marking Systems GmbH
Maarweg 33

D-53619 Rheinbreitbach

Product:

Type: Markoprint X1JET
Model: „Print", „Basic", „Advanced", „Pro"
Function: Ink-Jet-Printer

is complying with the essential protection requirements of:

The Low Voltage Directive	2006/95/EG
The EMC Directive	2004/108/EG

In order to judge the products with respect to above mentioned directive, the following standards were taken as a basis:

Interference resistance:

- EN 55022 — Interfering voltage
- EN 55022 — Interference field strength
- EN 61000-6-2: — Interference resistance against electromagnetic fields
- EN 61000-6-2: — Interference resistance against high frequency on cables
- EN 61000-6-2: — Interference resistance against ESD
- EN 55024 — Interference resistance against Burst
- EN 61000-6-2: — Interference resistance against Surge
- EN 55024: — Interference resistance against voltage changes and interrupts

Emitted interference:

- EN 61000-3-2: — Limits of harmonic current emissions
- EN 61000-3-3 — Limits of voltage changes, fluctuation and flicker

If the product is changed without our agreement, this declaration loses its validity.

Rheinbreitbach, 20.02.2012

ppa

Andreas Bluhm, Vice President Weber Marking Systems GmbH